(E	PLOT SCALE: 1=1	DWG. SCALE: 1

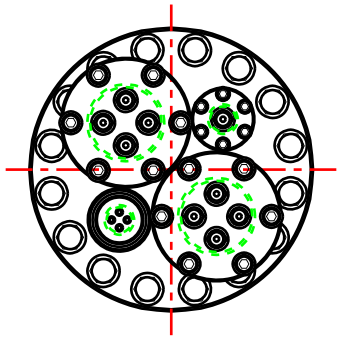

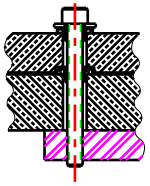

SECTION B-B

SCALE: 2X

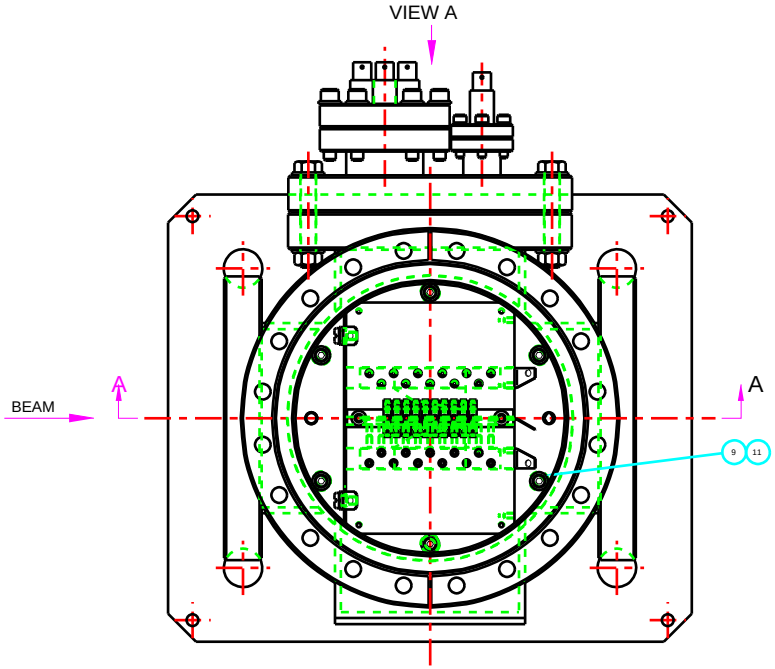

** BLANK FLANGE REMOVED FOR CLARIFICATION **

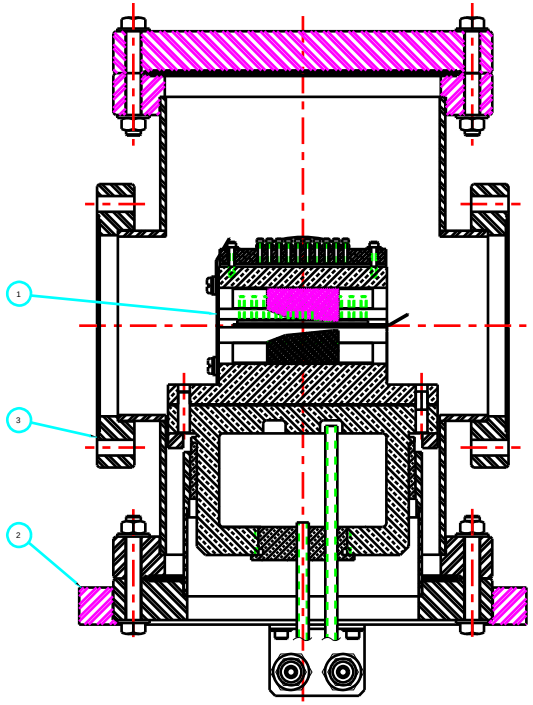

SECTION A-A

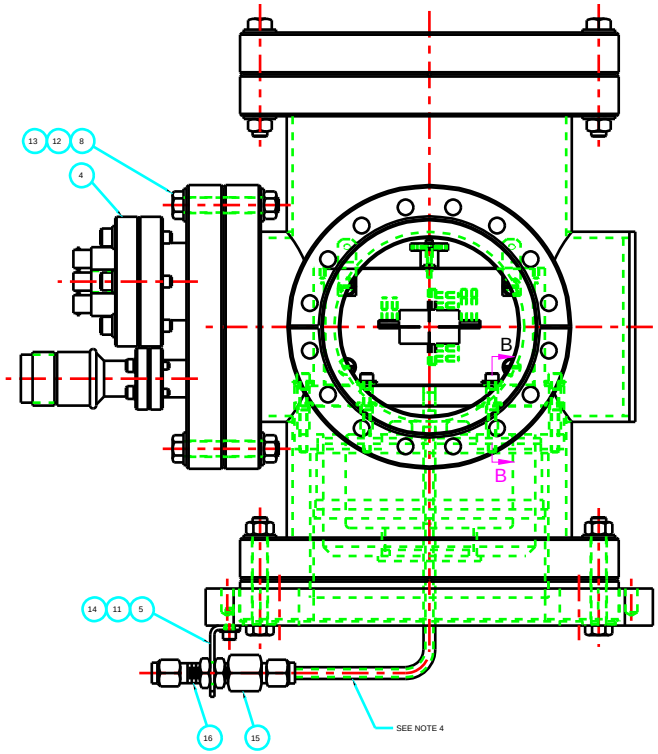

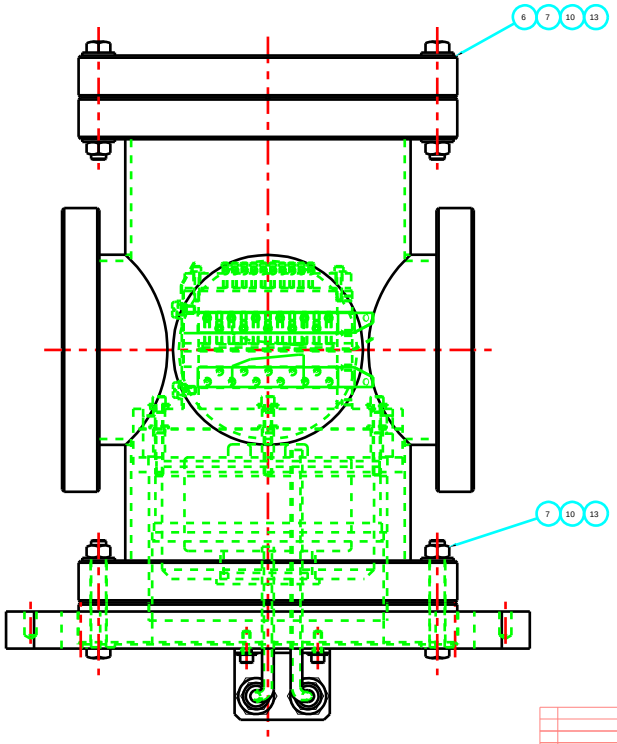

NOTES:

1. THIS IS A ULTRA-HIGH VACUUM CHAMBER (UHV).
2. VACUUM CHAMBER SHALL BE LEAK TESTED USING A MASS SPECTROMETER WITH MINIMUM SENSITIVITY FOR HELIUM OF 2 x 10 STANDARD CC/SEC PER LEAK METER DIVISION, SUCH AS:
   ALCATEL ASM-110TCL
   VARIAN NCR 925 OR 936
   VEECO MS-9, MS-90 OR MS-18
   DuPONT CEC 24-120B

   CALIBRATION OF THE LEAK DETECTOR SENSITIVITY SHALL BE PERFORMED JUST PRIOR TO TESTING.

   FINAL TEST WILL CONSIST OF SURROUNDING THE CHAMBER (BAGGING) WITH HELIUM. THE CHAMBER WILL BE REJECTED IF A 2% DEFLECTION IN THE MOST SENSITIVE RANGE OF LEAK DETECTOR IS SENSED WITHIN 1 MIN.
3. KEEP THE PART CLEAN AND WRAP FOR UHV PACKING WITH ALUMINUM FOIL.
4. BEND 90° WITH .50 RADIUS AND CUT TO FIT PRIOR TO INSTALLATION WITH SWAGELOKS (ITEMS 15 & 16).

ITEM	DWG/PART NUMBER	NOMENCLATURE OR DESCRIPTION	MATERIAL / SPEC	QTY
16		BULKHEAD UNION	SWAGELOK #SS-400-11-4	2
15		FEMALE CONNECTOR	SWAGELOK #SS-400-7-4	2
14		SOCKET HEAD CAP SCREW VENTED #8-32 UNC-3A x .50 LG	U-C COMPONENTS, INC. #C-808-A SILVER PLATED	2
13		HEX NUT 5/16-24 UNC-2B		56
12		FLATWASHER .68 O.D. x .34 I.D. x .04 THK		32
11		FLATWASHER .38 O.D. x .17 I.D. x .03 THK	SILVER PLATED	10
10		FLATWASHER .68 O.D. x .34 I.D. x .06 THK		80
9		SOCKET HEAD CAP SCREW #8-32 UNC-3A x 1.50 LG	SILVER PLATED	6
8		HEX HEAD CAP SCREW 5/16-24 UNC-3A x 2.00 LG		16
7		HEX HEAD CAP SCREW 5/16-24 UNC-3A x 2.25 LG		40
6		8" NOM. BLANK NON-ROT. FLANGE	MDC #110030	1
5	P4102010104-200001-00	B1 BRACKET		1
4	P4102010104-240000-00	B1 CONNECTOR FLANGE SUB-ASSEMBLY		1
3	P4102010104-230000-00	B1 CHAMBER WELDMENT		1
2	P4102010104-220000-00	B1 COOLING BASE SUB-ASSY WELDMENT		1
1	P4102010104-510000-00	B1 MONITOR SUB-ASSEMBLY		1

PARTS LIST

UNLESS OTHERWISE SPECIFIED: ALL DIMENSIONS ARE IN INCHES

TOLERANCES:

DECIMALS	ANGULAR
X ± .015	± .25
XX ± .010	
XXX ± .005	

SURFACE ROUGHNESS: 250

REMOVE ALL BURRS AND BREAK SHARP EDGES .015 MAX.

SURFACE TEXTURE TO BE IN ACCORDANCE WITH LATEST ANSI B46.1

DIMENSIONING & TOLERANCING IN ACCORDANCE WITH LATEST ANSI Y 14.5

DO NOT SCALE DRAWING

LOG NUMBER: A12024

THIS DRAWING IS THE PROPERTY OF ARGONNE NATIONAL LABORATORY

DRAWN BY: RICK KRAKORA	DATE: 7/93	CHIEF DESIGN ENGINEER: D. SHU	DATE: 8/31/93
CHECKED BY: J.W.	8/31/93	T. KUZAY	8/31/93
DESIGNER: D. SHU	8/31/93	PROJECT MGR.	
RESPONSIBLE ENGINEER: D. SHU	8/31/93	APPROVED/RELEASED	

MATERIAL: SEE B.O.M.

TITLE: ADVANCED PHOTON SOURCE
B1 ID FRONT END
SECOND BEAM POSITION MONITOR
MAIN ASSEMBLY
(FOR UNDULATOR ONLY)

SCALE: 1:1 SHEET 1 of 1 SIZE: E DRAWING NUMBER: P4102010104-500000-00

SYM	CHANGE DESCRIPTION	BY	CHKD	DATE

REVISIONS