PLOT SCALE: 1=1	DWG. SCALE: 1	

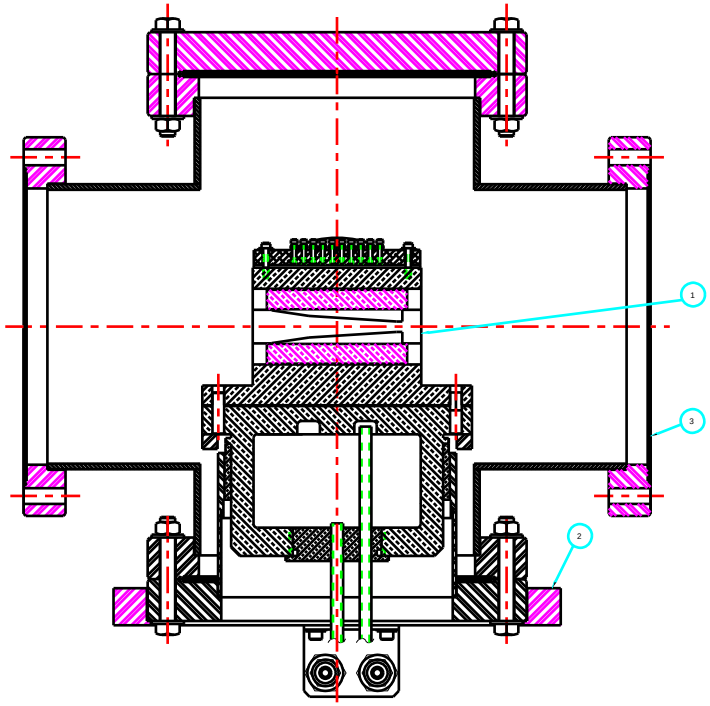

SECTION A-A

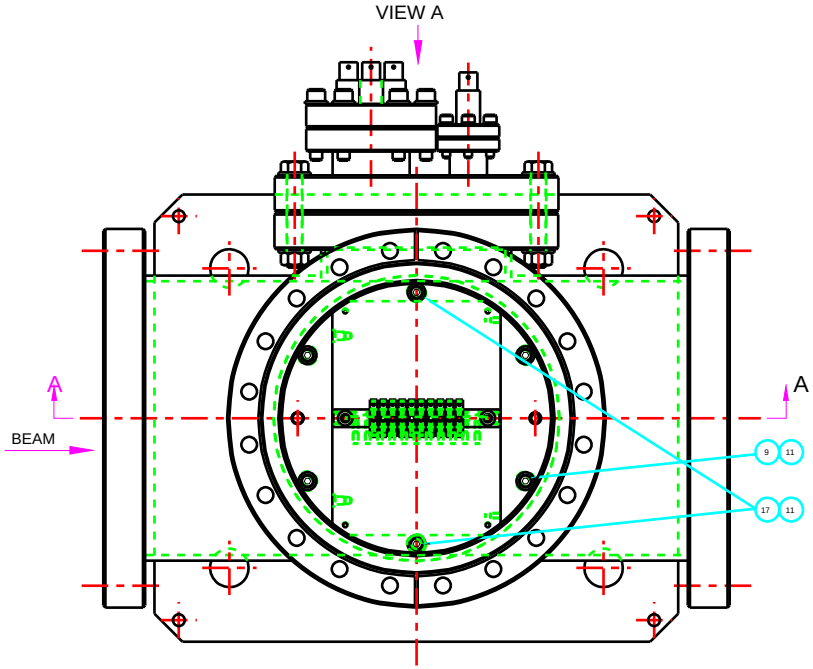

** BLANK FLANGE REMOVED FOR CLARIFICATION **

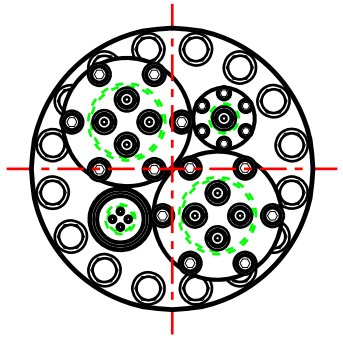

VIEW A
(ROTATES 90°)

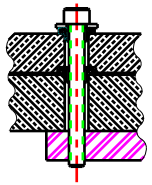

SECTION B-B
SCALE: 2X

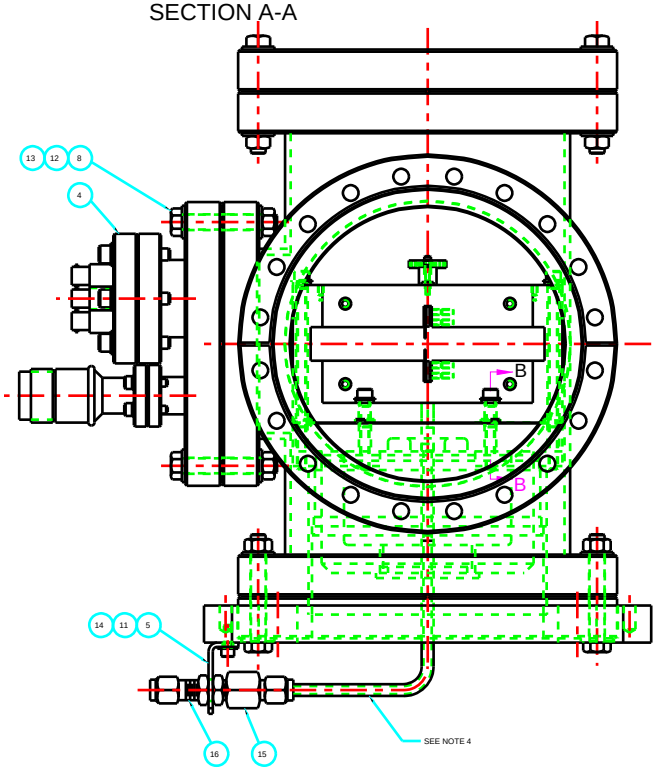

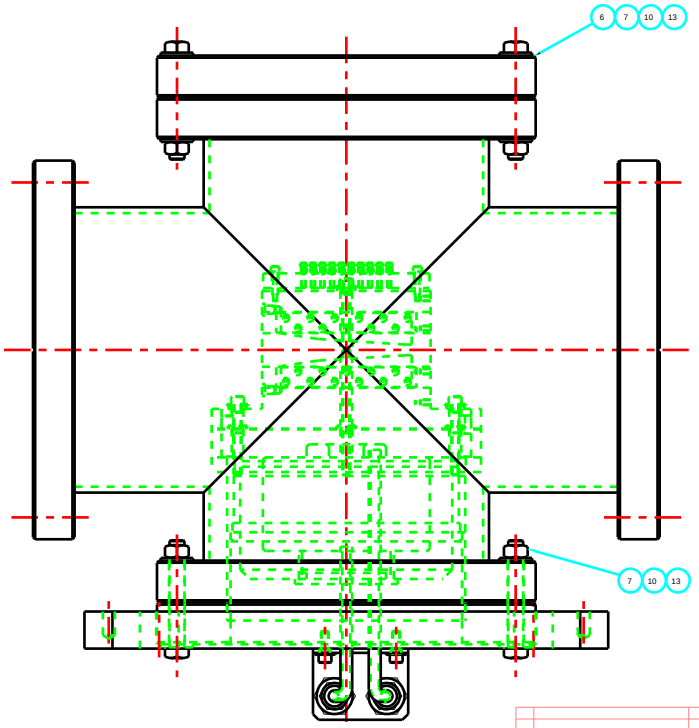

NOTES:

1. THIS IS A ULTRA-HIGH VACUUM CHAMBER (UHV).

2. VACUUM CHAMBER SHALL BE LEAK TESTED USING A MASS SPECTROMETER WITH MINIMUM SENSITIVITY FOR HELIUM OF 2 x 10 STANDARD CC/SEC PER LEAK METER DIVISION, SUCH AS:
   - ALCATEL ASM-110TCL
   - VARIAN NCR 925 OR 936
   - VEECO MS-9, MS-90 OR MS-18
   - DuPONT CEC 24-120B

   CALIBRATION OF THE LEAK DETECTOR SENSITIVITY SHALL BE PERFORMED JUST PRIOR TO TESTING.

   FINAL TEST WILL CONSIST OF SURROUNDING THE CHAMBER (BAGGING) WITH HELIUM. THE CHAMBER WILL BE REJECTED IF A 2% DEFLECTION IN THE MOST SENSITIVE RANGE OF LEAK DETECTOR IS SENSED WITHIN 1 MIN.

3. KEEP THE PART CLEAN AND WRAP FOR UHV PACKING WITH ALUMINUM FOIL.

4. BEND 90° WITH .50 RADIUS AND CUT TO FIT PRIOR TO INSTALLATION OF SWAGELOKS.

ITEM	DWG/PART NUMBER	NOMENCLATURE OR DESCRIPTION	MATERIAL / SPEC	QTY
17		SOCKET HEAD CAP SCREW #8-32 UNC-3A x 4.00 LG	SILVER PLATED	2
16		BULKHEAD UNION	SWAGELOK #SS-400-11-4	2
15		FEMALE CONNECTOR	SWAGELOK #SS-400-7-4	2
14		SOCKET HEAD CAP SCREW VENTED #8-32 UNC-3A x .50 LG	U-C COMPONENTS, INC. #C-808-A SILVER PLATED	2
13		HEX NUT 5/16-24 UNC-2B		56
12		FLATWASHER .68 O.D. x .34 I.D. x .04 THK		32
11		FLATWASHER .38 O.D. x .17 I.D. x .03 THK	SILVER PLATED	8
10		FLATWASHER .68 O.D. x .34 I.D. x .06 THK		80
9		SOCKET HEAD CAP SCREW #8-32 UNC-3A x 1.50 LG	SILVER PLATED	4
8		HEX HEAD CAP SCREW 5/16-24 UNC-3A x 2.00 LG		16
7		HEX HEAD CAP SCREW 5/16-24 UNC-3A x 2.25 LG		40
6		8" NOM. BLANK NON-ROT. FLANGE	MDC #110030	1
5	P4102010104-200001-00	B1 BRACKET		1
4	P4102010104-240000-00	B1 CONNECTOR FLANGE SUB-ASSEMBLY		1
3	P4102020104-230000-00	B3 CHAMBER WELDMENT		1
2	P4102010104-220000-00	B1 COOLING BASE SUB-ASSY WELDMENT		1
1	P4102020104-310000-00	B3 MONITOR SUB-ASSEMBLY		1

PARTS LIST

UNLESS OTHERWISE SPECIFIED: ALL DIMENSIONS ARE IN INCHES
TOLERANCES:
DECIMALS: X ± .015, XX ± .010, XXX ± .005
ANGULAR: ± .25°
SURFACE ROUGHNESS: 250
REMOVE ALL BURRS AND BREAK SHARP EDGES .03 MAX.
SURFACE TEXTURE TO BE IN ACCORDANCE WITH LATEST ANSI B46.1
DIMENSIONING & TOLERANCING IN ACCORDANCE WITH LATEST ASME Y14.5

DO NOT SCALE DRAWING

LOG NUMBER: A12295

THIS DRAWING IS THE PROPERTY OF ARGONNE NATIONAL LABORATORY

DRAWN BY: RICK KRAKORA	DATE: 7/93	CHIEF DESIGN ENGINEER: D. SHU	DATE: 8/31/93
CHECKED BY: J.W.	8/31/93	T. KUZAY	8/31/93
DESIGNER: D. SHU	8/31/93	PROJECT MGR.	
RESPONSIBLE ENGINEER: D. SHU	8/31/93	APPROVED/RELEASED	

MATERIAL: SEE B.O.M.

TITLE: ADVANCED PHOTON SOURCE

B3 BM FRONT END
SECOND BEAM POSITION MONITOR
MAIN ASSEMBLY

SCALE: 1:1 SHEET 1:4 SIZE: E DRAWING NUMBER: P4102020104-300000-00

SYM	CHANGE DESCRIPTION	BY	CHKD	DATE

REVISIONS