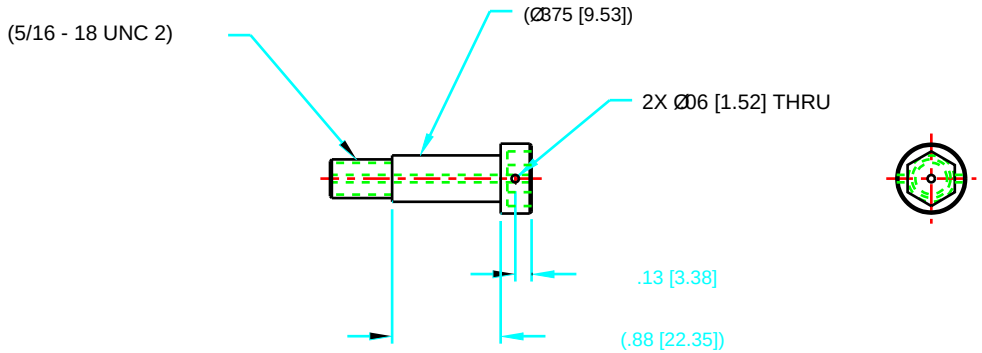

NOTES:

1. MAKE FROM A STANDARD 5/16 - 18 X .88" LG SHOULDER SCREW
   MATERIAL - SST/SILVER PLATED
2. DIMENSIONS IN [ ] ARE MILLIMETERS AND FOR REF. ONLY

ITEM	DWG/PART NUMBER	NOMENCLATURE OR DESCRIPTION	MATERIAL / SPEC	QTY

PARTS LIST

UNLESS OTHERWISE SPECIFIED:
ALL DIMENSIONS ARE IN INCHES

TOLERANCES

DECIMALS		ANGULAR
.X –	.1 [2.5]	– 0°30'
.XX –	.01 [0.25]	
.XXX –	.005 [0.13]	

SURFACE ROUGHNESS 125

REMOVE ALL BURRS AND
BREAK SHARP EDGES .03 MAX.

SURFACE TEXTURE TO BE IN
ACCORDANCE WITH LATEST ANSI B46.1

DIMENSIONING & TOLERANCING IN
ACCORDANCE WITH LATEST ANSI Y14.5

DO NOT SCALE DRAWING

LOG NUMBER
K5210002-00

THIS DRAWING IS THE PROPERTY OF
ARGONNE NATIONAL LABORATORY

DRAWN BY: MUSCIA	DATE: 8/12/98	CHIEF DESIGN ENGINEER: D. SHU	DATE: 9/9/98
CHECKED BY: J. CHANG	DATE: 9/9/98	GP LEADER: T.M. KUZAY	DATE: 9/14/98
DESIGNER: CHANG/MUSCIA	DATE: 8/11/98	PROJECT MGR.	DATE
RESPONSIBLE ENGINEER: J. CHANG	DATE: 9/9/98	APPROVED/RELEASED	DATE

TITLE
ADVANCED PHOTON SOURCE
K5-20 HEAVY METAL
COLLIMATOR FOR 4-ID-A
5/16 - 18 UNC 2A VENTED
SHOULDER SCREW

MATERIAL
SEE NOTE #1

SCALE 1:1
SHEET 1 of 1
SIZE B
DRAWING NUMBER
K5-210002-00

SYM	CHANGE DESCRIPTION	BY	CHKD	DATE

REVISIONS