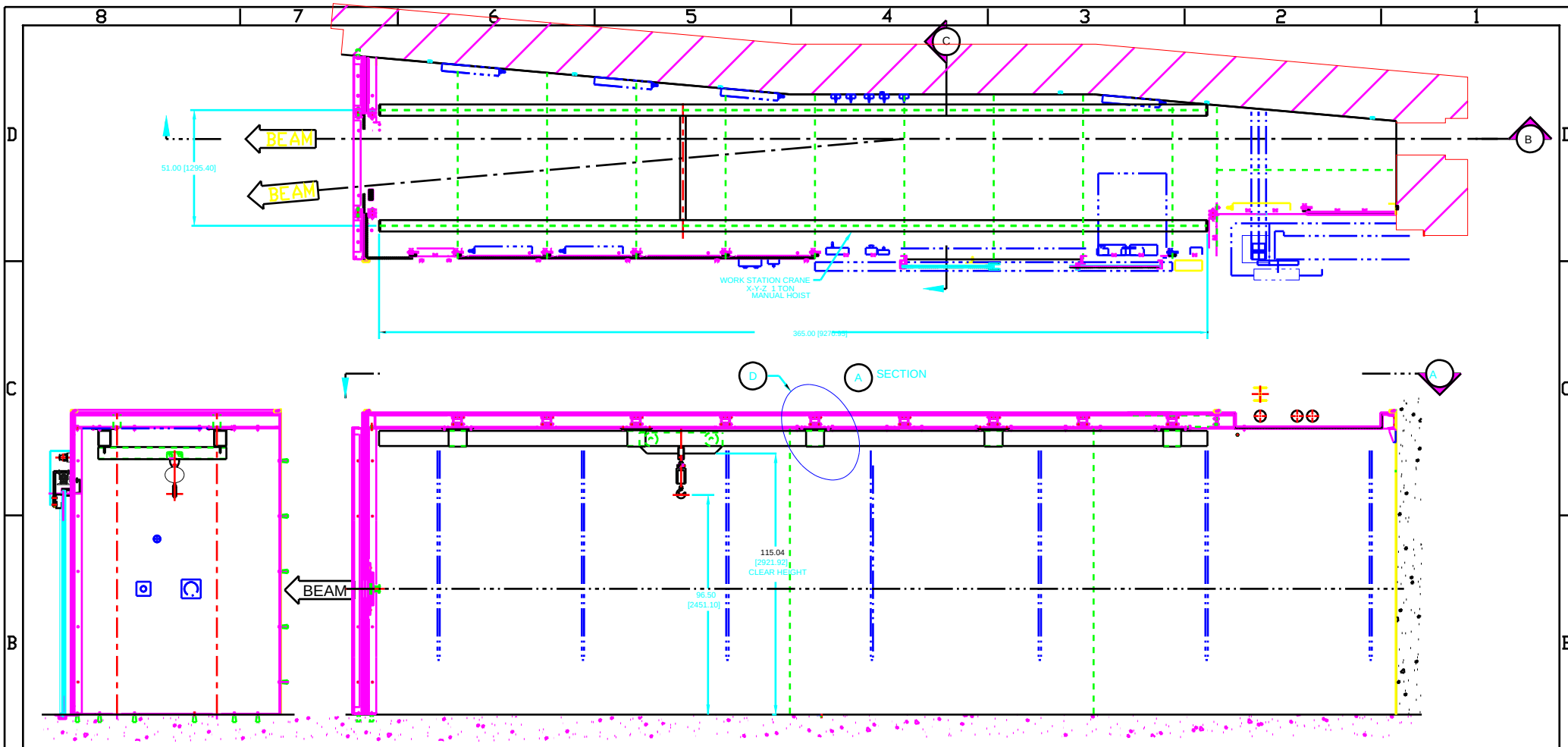

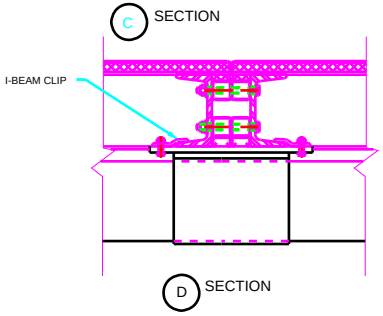

NOTES:

1. "GORBEL" CEILING SUPPORTED WORK STATION X-Y TROLLEY OR EQUIV. WITH CAPACITY 1000 Kg.[1 TON].

2. "BUDGIT USA" MANUAL CHAIN HOIST WITH CAPACITY 1000 Kg.[1 TON] WITH SAFETY OVERLOAD DEVICE OR EQUIV.

LEGEND:

DET./SECT.

SHT. SHOWN

ITEM	DWG/PART NUMBER	NOMENCLATURE OR DESCRIPTION	MATERIAL / SPEC	QTY

PARTS LIST

DRAWN BY corcuera	DATE 3/24/97	CHIEF DESIGN ENGINEER D. SHU	DATE 6/24/97
DESIGNED BY J.CHANG, G. SRAJER, K. RANDALL	DATE 6/18/97, 6/18/97	DIV LEADER T. KUZAY	DATE 6/25/97
CHECKED BY CORCUERA/CHANG	DATE 6/24/97	PROJECT TOM D. MILLS, E. GLUSKIN	DATE 6/20/97, 6/20/97
CONCURRENT ENGINEER J. CHANG	DATE 6/26/97		
MATERIAL (CRANE)		SCALE 3/64:1	SHEET 1010

THIS DRAWING IS THE PROPERTY OF ARGONNE NATIONAL LABORATORY

TITLE ADVANCED PHOTON SOURCE

HJ SRICAT FOE 4-ID-A
FIRST OPTICS ENCLOSURE
ASSEMBLY

SIZE D

DRAWING NUMBER HJ-310000-00-10

DATE	CHANGE DESCRIPTION	BY	CHKD	DATE

REVISIONS

DO NOT SCALE DRAWING