REVISIONS					
ZONE	REV	DESCRIPTION	BY	APPROVED	DATE

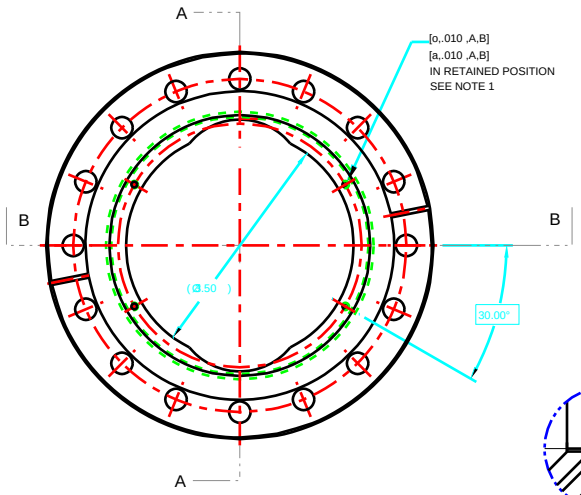

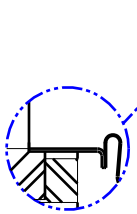

ENLARGED VIEW

SCALE 2:1

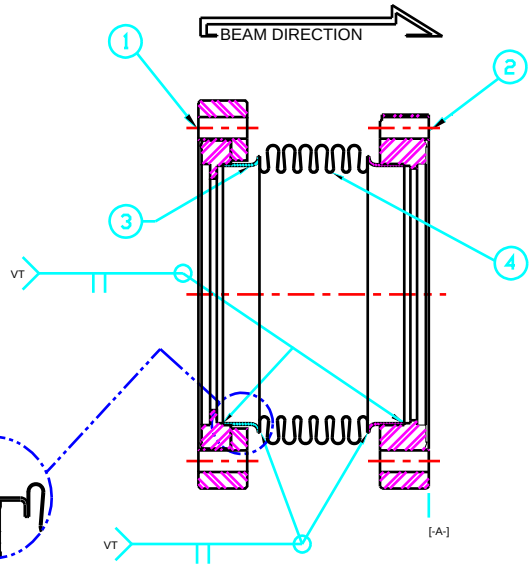

SECTION A-A

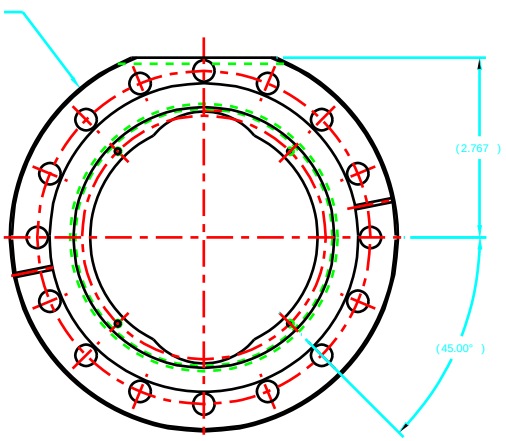

BELLOWS ASSY. SPECIFICATIONS

BELLOWS:

AXIAL STROKE	+0.65 IN., -0.45 IN.
LATERAL OFFSET	.04 IN.
AXIAL SPRING RATE	70 LB/IN. OR LESS

ENVIRONMENT:

NORMAL OPERATING TEMPERATURE	70° - 90°F
MAXIMUM TEMPERATURE	310°F
WORKING PRESSURE DIFFERENTIAL	1 ATM. (EXTERNAL)

CYCLIC LIFE:

0.65 INCH STROKE WITH .04 OFFSET AT 310°F*	100 CYCLES WITH RELIABILITY, R=.9995
0.03 INCH STROKE WITH .04 OFFSET AT 310°F*	10,000 CYCLES WITH RELIABILITY, R=.9995

* BELLOWS CYCLIC LIFE APPLIES ANYWHERE BETWEEN ASSEMBLY LENGTH OF 2.80 AND 3.70 FOR .65 STROKE AND ANYWHERE BETWEEN ASSEMBLY LENGTH OF 3.45 AND 3.70 FOR .03 STROKE.

MATERIAL:

BELLOWS	INCONEL 625 (.006 THICK)
WELD CUFF	INCONEL 625 (.024 THICK MINIMUM)
FLANGES	AISI 316L STAINLESS STEEL

LEAK TIGHTNESS:
BELLOWS ASSEMBLY SHALL BE LEAK TIGHT TO 2×10^{-18} STD-CC/SEC HELIUM

SPECIFIC OUTGOING RATE:
4×10^{-12} TORR - L/S - CM^{-2}
AFTER BAKING AT 200°C FOR 24 HOURS

CONSTRUCTION:
- BELLOWS SHALL BE CONSTRUCTED FROM SEAMLESS TUBE OR 100% PENETRATION BUTT-WELD TUBE.
- MANUFACTURER MAY ADJUST WELD JOINT DESIGNS TO MEET THEIR PROCESS REQUIREMENTS.
- VENDOR SHALL PROVIDE JOINT DETAILS FOR ANL APPROVAL PRIOR TO FABRICATION.

BELLOWS ASSEMBLY LENGTH:
- MIN. COMPRESSED LENGTH..... 2.80
- FREE LENGTH..... 3.25
- MAX. EXTENDED LENGTH..... 3.90
- INSTALL LENGTH (NOMINAL)..... 3.54

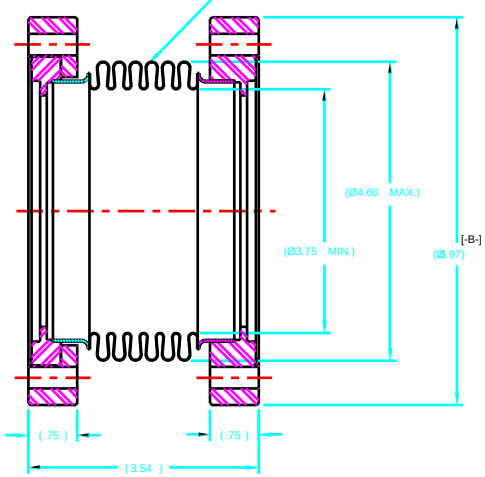

INSTALL LENGTH (NOMINAL)

SECTION B-B

ROTATED 90°

NOTES:
1. THE FLANGES HAVE FOUR #4-40 THREADED HOLES IN THEM. THE PATTERN OF HOLES IN ONE FLANGE MUST BE ALIGNED TO THE HOLE PATTERN ON THE OPPOSITE FLANGE TO THE TOLERANCE SPECIFIED ON DRAWING. IT IS EXPECTED THAT THE VENDER SHALL USE A FIXTURE TO POSITION THE FLANGES ACCURATELY WITH RESPECT TO ONE ANOTHER DURING WELDING.

ITEM	DRAWING NUMBER W/O REV LEVEL	NOMENCLATURE OR DESCRIPTION	MATERIAL / SPEC	QTY
4	410103-100413	BELLOWS	–	1
3	410103-100412	CUFF	–	2
2	410103-100411	Ø NON-ROTATABLE CUT FLANGE	–	1
1	410103-100410	Ø ROTATABLE FLANGE	–	1

PARTS LIST (OR LIST OF MATERIAL)

MATERIAL: SEE PARTS LIST

UNLESS OTHERWISE SPECIFIED
ALL DIMENSIONS ARE IN INCHES
TOLERANCES
DECIMALS: .X ± .1; .XX ± .01; .XXX ± .005
ANGULAR ± .25°
SURFACE ROUGHNESS 125

REMOVE ALL BURRS AND BREAK SHARP EDGES .03 MAX.
SURFACE TEXTURE TO BE IN ACCORDANCE WITH LATEST ANSI B46.1
DIMENSIONING & TOLERANCING IN ACCORDANCE WITH LATEST ANSI Y14.5

ELECTRONIC FILE NAME
A15998

DRAWN BY	CARRERA/BELKO	DATE 04/11/94
DESIGN BY	CARRERA	DATE 01/18/94
CHECKED BY		DATE
RESPONSIBLE ENGINEER		DATE
GROUP LEADER		DATE
		DATE
		DATE
		DATE

THIS DRAWING IS THE PROPERTY OF
ARGONNE NATIONAL LABORATORY
ADVANCED PHOTON SOURCE

EXPERIMENTAL FACILITIES
TECHNICAL COMPONENTS
INSERTION DEVICE
BELLOWS AND FLANGE ASSEMBLY
(ASSEMBLY)

SIZE	FSCM NO	DWG NO	REV
D	0HRH5	410103-100409	00

SCALE 1=1 EST. WT. SHEET 1/1