(E)	PLOT SCALE: 1=1	DWG. SCALE: 1	A2307102

DESIGN SPECIFICATIONS
FOR M9-30 FIXED MASK:

1. LOCATION: 33.6 m FROM APS ID STRAIGHT SECTION CENTER
2. OPTICAL APERTURE AREA: 14 mm (H) x 38 mm (V)
3. HORIZONTAL MAXIMUM ACCEPTANCE: 1.66 mrad
4. VERTICAL MAXIMUM ACCEPTANCE: 1.13 mrad
5. INPUT FLANGE O.D.: 8 inch
6. OUTPUT FLANGE O.D.: 8 inch
7. MASK GRAZING INCIDENCE ANGLE: 4.7° & 30°
8. MASK MATERIAL: GLID-COP
9. WATER COOLING: MESH-FILLED TUBE
10. MASK LENGTH: 290 mm
11. DEVICE FLANGE TO FLANGE LENGTH: 355 mm
12. VACUUM: UHV COMPATIBLE
13. MAXIMUM TOTAL POWER: 4000 W (4.7° SURFACE)
600 W (30° SURFACE)

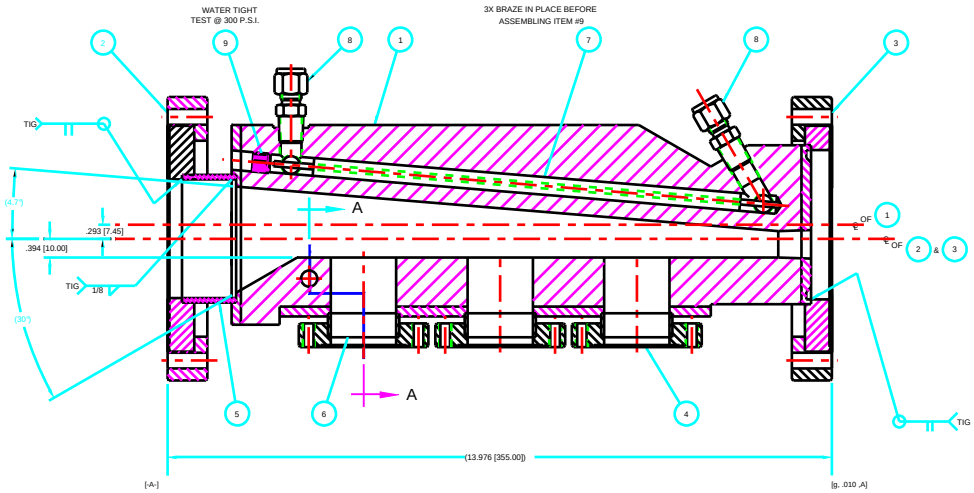

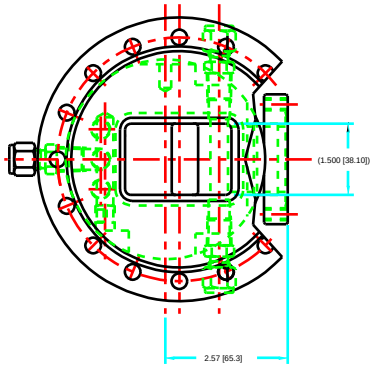

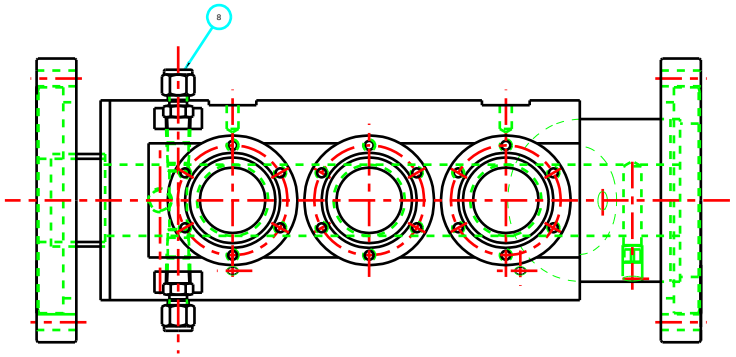

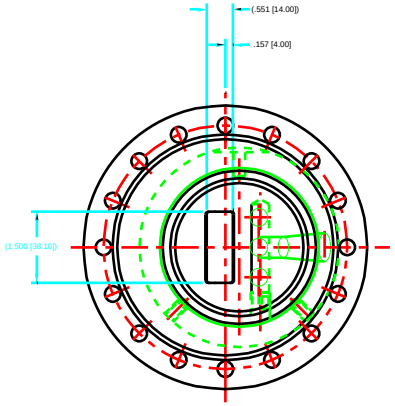

NOTES:

1. THIS IS A ULTRA HIGH VACUUM ASSEMBLY, ELECTROPOLISHING IS NEEDED BEFORE WELDING. PRIOR TO ELECTROPOLISHING, THE PARTS NEEDS TO GO THROUGH A MULTIPLE STEP CLEANING PROCESS INVOLVING DEGREASING, WASHING AND DRY NITROGEN BLOW DOWN.

2. WELDMENT ASSEMBLY SHALL BE LEAK TESTED USING A MASS SPECTROMETER WITH MINIMUM SENSITIVITY FOR HELIUM OF 2 X 10 -10 STANDARD CC/SEC PER LEAK METER DIVISION, SUCH AS
   ALCATEL SAM-110TCL
   Du PONT CEC 24-120B
   VARIAN MS-9, MS-90 OR MS-18

   CALIBRATION OF THE LEAK DETECTOR SENSITIVITY SHALL BE PERFORMED JUST PRIOR TO TESTING.
   FINAL TEST WILL CONSIST OF SURROUNDING THE ASSEMBLY (BAGGING) WITH HELIUM. THE ASSEMBLY WILL BE REJECTED IF A 2% DEFLECTION ON THE MOST SENSITIVE RANGE OF THE LEAK DETECTOR IS SENSED WITHIN 1 MIN.

3. ASSEMBLY SHALL BE WATER TESTED FOR LEAKS @ 300P.S.I.

4. KEEP THE ASSEMBLY CLEAN, AND WRAP FOR UHV PACKING WITH ALUMINUM FOIL.

5. DIMENSIONS IN [ ] ARE MILLIMETERS AND FOR REF. ONLY

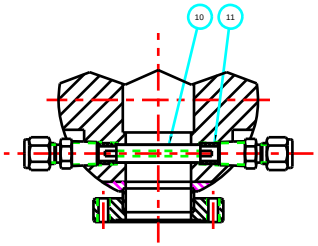

SECTION A-A

REF. SOURCE

1. (SWAGELOK)
DEARBORN VALVE & FITTING CO.
1540 N. OLD RAND ROAD
P.O. BOX 847
WAUCONDA, IL. 60084-0847
708-526-6900
FAX: 708-526-1221

2. THE LEE CO.
2 PETIPAUG RD.
P.O. BOX 424
WESTBROOK, CN. 06498-0424
203-399-6281
FAX: 203-399-7058

ITEM	DWG/PART NUMBER	NOMENCLATURE OR DESCRIPTION	MATERIAL / SPEC	QTY
11	P4105091009-300008	M9-30 SPACER	SST	2
10	P4105091009-300007	M9-30 Ø1/8 x 2.00 LG COPPER MESH	COPPER/SST	1
9	PLGA4060020A	LEE PLUG	SST	5
8	SS-600-1-4	Ø1/8 TUBE MALE CONNECTOR	SST	4
7	P4105091009-300006	M9-30 Ø1/8 x 9.00 LG COPPER MESH	COPPER/SST	3
6	P4105091009-300005	M9-30 EXTENSION TUBE	SST	3
5	P4105091009-300004	M9-30 RECTANGULAR EXTENSION TUBE	SST	1
4	P/N 130014	2-3/4 NOM. O.D. NONROTATABLE FLANGE	SST	3
3	P4105091009-300003	M9-30 RIGHT VACUUM FLANGE	SST	1
2	P4105091009-300002	M9-30 LEFT VACUUM FLANGE	SST	1
1	P4105091009-300001	M9-30 MAIN BODY	GLID - COP	1

PARTS LIST

2	GEN. UPDATE;	J.G.	J.C.	4/12/96
1	GEN. UPDATE;	J.G.	J.C.	11/14/95
SYM	CHANGE DESCRIPTION	BY	CHKD	DATE

REVISIONS

UNLESS OTHERWISE SPECIFIED ALL DIMENSIONS ARE IN INCHES
TOLERANCES
DECIMALS: X ± .03, XX ± .01, XXX ± .005
ANGULAR: ± .25°
SURFACE ROUGHNESS 125
REMOVE ALL BURRS AND BREAK SHARP EDGES .03 MAX.
SURFACE TEXTURE TO BE IN ACCORDANCE WITH LATEST ANSI B46.1
DIMENSIONING & TOLERANCING IN ACCORDANCE WITH LATEST ANSI Y14.5
DO NOT SCALE DRAWING

LOG NUMBER A2307102

THIS DRAWING IS THE PROPERTY OF ARGONNE NATIONAL LABORATORY

DRAWN BY J.GOGOL	DATE 6/16/95	CHIEF DESIGN ENGINEER D.SHU	DATE 8/13/95
CHECKED BY J.CHANG	8/11/95	SUP. LEADER T.M.KUZAY	8/15/95
DESIGNER J.GOGOL/J.CHANG	6/16/95	PROJECT MGR.	
RESPONSIBLE ENGINEER J.CHANG	8/11/95	APPROVED/RELEASED	

MATERIAL SEE B/M

TITLE ADVANCED PHOTON SOURCE
M9-30 2 ID-D
FIXED MASK ASSEMBLY

SCALE 1:1 SHEET 1-1 SIZE E DRAWING NUMBER P4105091009-300000-02