(E)	PLOT SCALE: 1/4	DWG. SCALE: 4	A07524

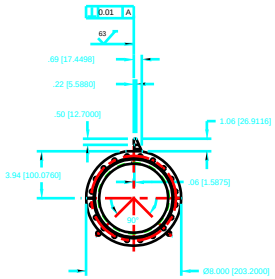

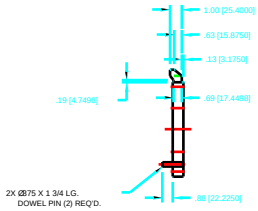

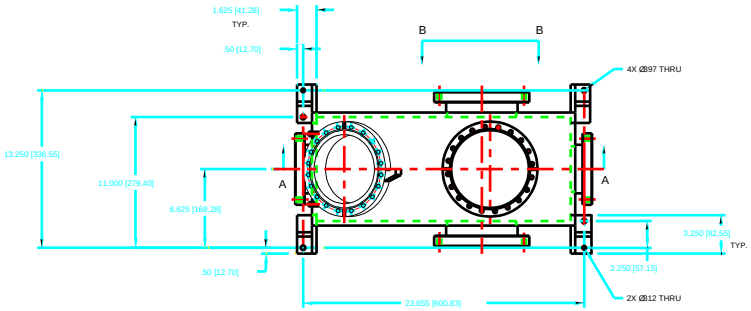

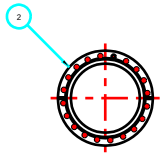

VIEW B - B

NOTE:

1. MAKE FROM MDC'S FLANGE CAT. #110031

DETAIL X

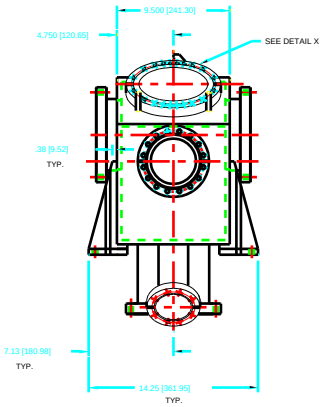

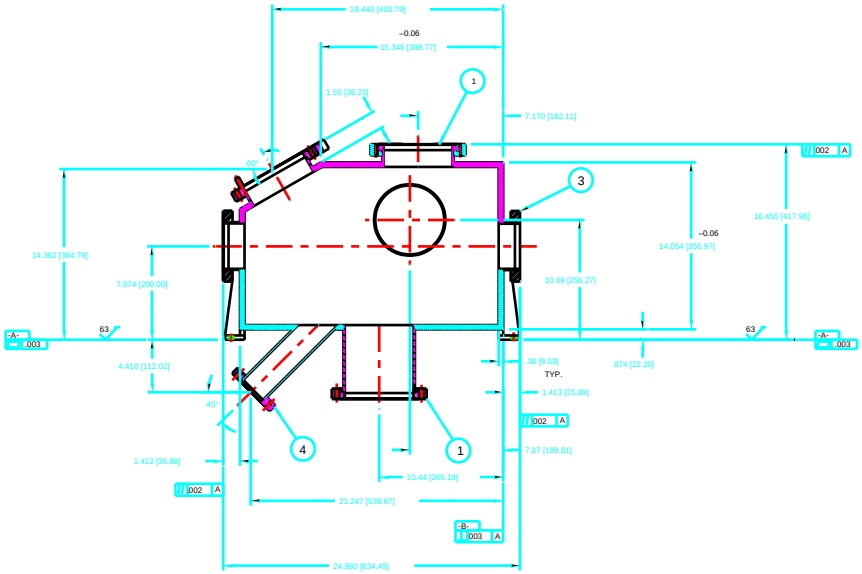

SECTION A - A

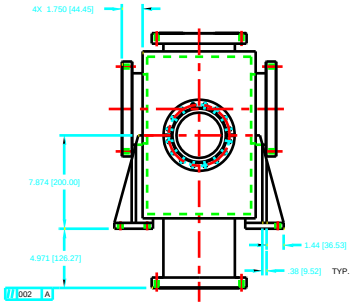

NOTES:

1. THIS IS A ULTRA - HIGH VACUUM CHAMBER (UHV)
2. WHEN MACHINING VACUUM PARTS, USE OF SILICONE AND SULPHUR-BASED CUTTING FLUIDS IS PROHIBITED. USE ONE OF THE FOLLOWING:
   A) CIMCOOL 5 STAR 49
   B) TRIM SOL
3. CHAMBER HAS TO BE STRESS ANNEALED, BEFORE WELDING THE VACUUM FLANGES, AND FINISHING THE DATUM "A" SURFACE. STRESS ANNEALING MAY USE THERMAL, OR VIBRATORY STRESS RELIEVING METHOD.
4. ELECTROPOLISHING IS NEEDED BEFORE WELDING. PRIOR TO ELECTROPOLISHING, THE CHAMBER NEEDS TO GO THROUGH A MULTIPLE STEP CLEANING PROCESS INVOLVING DEGREASING, WASHING AND DRY NITROGEN BLOW DOWN. THE CHAMBER VACUUM SIDE SURFACE ROUGHNESS SHALL BE BETTER THAN 63 MICROINCH RMS AFTER ELECTROPOLISHING.
5. WELDS SHALL BE GAS TUNGSTEN ARC (GTAW) OR TUNGSTEN INERT GAS (TIG) ON VACUUM SIDE OF JOINTS.
6. VACUUM CHAMBER SHALL BE LEAK TESTED USING A MASS SPECTROMETER WITH MINIMUM SENSITIVITY FOR HELIUM OF 2X 10 -10 STANDARD CC/SEC PER LEAK METER DIVISION, SUCH AS:
   ALCATEL ASM-11OTCL
   VARIAN NCR 925 OR 936
   VEECO MS-9, MS-90 OR MS-18
   Du PONT CEC 24-120B
   CALIBRATION OF THE LEAK DETECTOR SENSITIVITY SHALL BE PERFORMED JUST PRIOR TO TESTING.
   FINAL TEST WILL CONSIST OF SURROUNDING THE CHAMBER (BAGGING) WITH HELIUM. THE CHAMBER WILL BE REJECTED IF A 2% DEFLECTION IN THE MOST SENSITIVE RANGE OF THE LEAK DETECTOR IS SENSED WITHIN 1 MIN.
7. IF CHAMBER SIDES FROM FORMED PLATES, THE MAXIMUM BEND RADII SHALL BE LESS THAN 0.25 INCH INSIDE.
8. DIMENSIONS IN [ ] ARE MILLIMETERS

4		4 1/2" FLANGE MDC'S CAT. #130021	SST	1
3		6" O.D. FLANGE MDC'S CAT. #110026	SST	2
2		8" O.D. FLANGE MCD'S CAT #110031	SST	2
1		ROTATABLE FLANGE MDC'S CAT.#100031	SST	2
ITEM	DRAWING NUMBER	DESCRIPTION	MATERIAL / SPEC	QTY

PARTS LIST

DWG NUMBER	A07524	ARGONNE NATIONAL LABORATORY	
DRAWN BY MUSCIA 11/12/92	CHECKED BY D. SHU 9/14/93		
	APPROVED BY T.M. KUZAY 9/14/93	ADVANCED PHOTON SOURCE	
MATERIAL MUSCIA		P2 2-ND PHOTON SHUTTER CHAMBER WELDMENT ASSY	
FINISH D. SHU 9/14/93			
304 STAINLESS STEEL	SCALE 1/4 SHEET 1 OF 1	SIZE E	DWG NUMBER P4102010106-230000-00

ITEM	DESCRIPTION	QTY	DWG	MATL