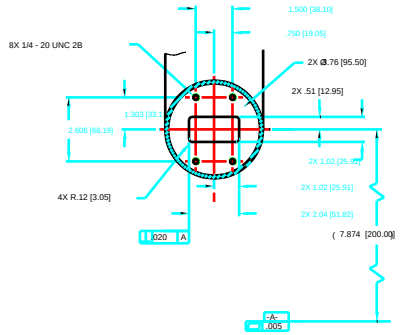

SECTION B - B

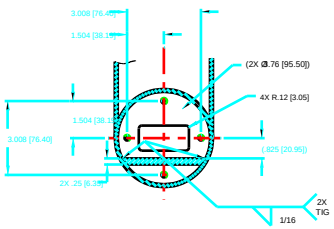

SECTION C - C

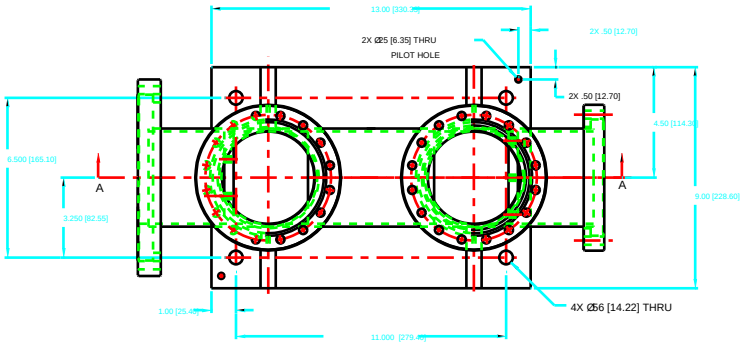

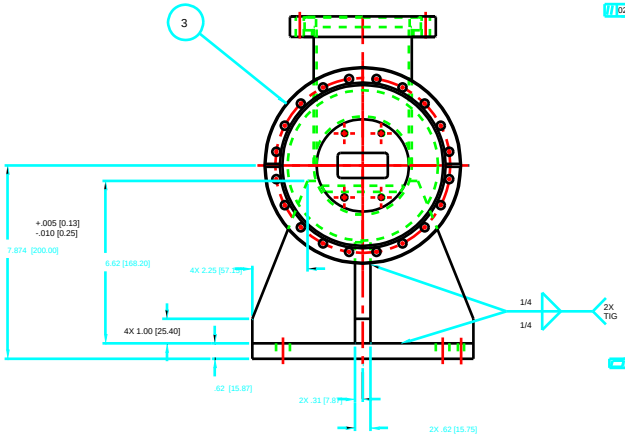

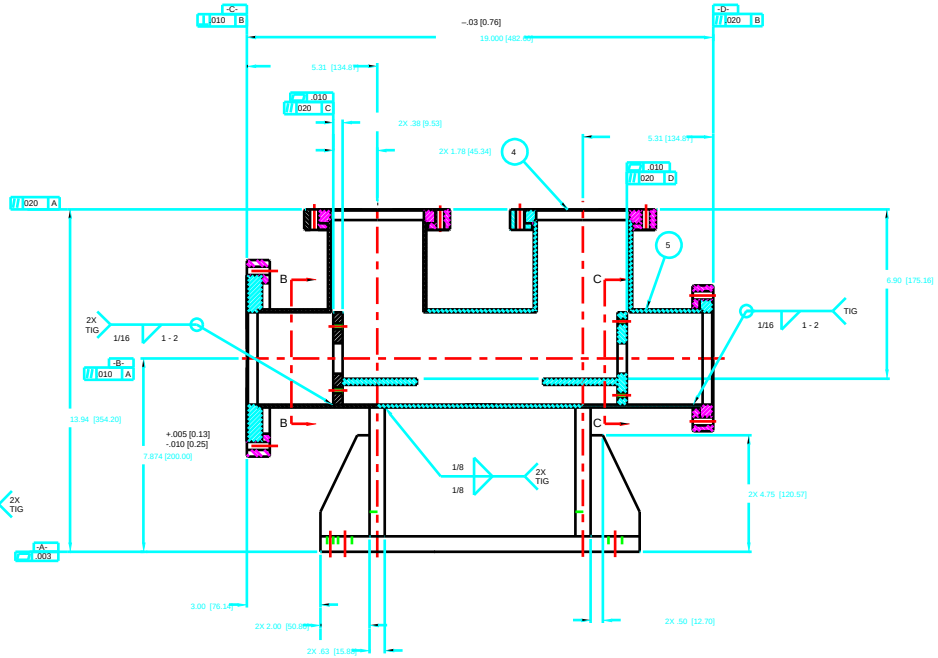

SECTION A - A

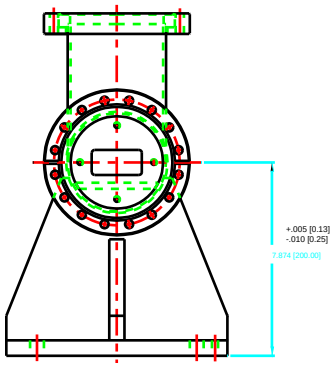

NOTES:

1. THIS IS A ULTRA - HIGH WELDMENT ASSEMBLY (UHV)
2. ALL MATERIALS ARE 304L STAINLESS STEEL UNLESS OTHERWISE SPECIFIED
3. WHEN MACHINING VACUUM PARTS, USE OF SILICONE AND SULPHUR-BASED CUTTING FLUIDS IS PROHIBITED. USE ONE OF THE FOLLOWING:
   A) CIMCOOL 5 STAR 49
   B) TRIM SOL
4. ELECTROPOLISHING IS NEEDED BEFORE WELDING. PRIOR TO ELECTROPOLISHIING, THE CHAMBER NEEDS TO GO THROUGH A MULTIPLE STEP CLEANING PROCESS INVOLVING DEGREASING, WASHING AND DRY NITROGEN BLOW DOWN. THE CHAMBERS VACUUM SIDE SURFACE ROUGHNESS SHALL BE BETTER THAN 63 MICROINCH RMS AFTER ELECTROPOLISHING
5. WELD SHALL BE GAS TUNGSTEN ARC (CTAW) OR TUNGSTEN INERT GAS (TIG) ON VACUUM SIDE OF JOINTS.
6. WELDMENT ASSEMBLY SHALL BE LEAK TESTED USING A MASS SPECTROMETER WITH MINIMUN SENSITIVITY FOR HELIUM OF 2X 10 -10 STANDARD CC/SEC PER LEAK METER DIVISION, SUCH AS:

   ALCATEL ASM-11OTCL
   VARIAN NCR 925 OR 936
   VEECO MS-9, MS-90 OR MS-18
   Du PONT CEC 24-120B

   CALIBRATION OF THE LEAK DETECTOR SENSITIVITY SHALL BE PERFORMED JUST PRIOR TO TESTING.

   FINAL TEST WILL CONSIST OF SURROUNDING THE ASSEMBLY (BAGGING) WITH HELIUM. THE ASSEMBLY WILL BE REJECTED IF A 2% DEFLECTION IN THE MOST SENSITIVE RANGE OF THE LEAK DETECTOR IS SENSED WITHIN 1 MIN.
7. DIMENSIONS IN [ ] ARE MILLIMETERS AND ARE FOR REF. ONLY

3		4" O.D. X .12 THK. WALL, TUBING	304L SST	AS REQ'D.
2	#100026	6" O.D. ROTATABLE VACUUM FLANGE	304 SST	3
1	#100030	8" O.D. ROTATABLE VACUUM FLANGE, 3.81 I.D.	304 SST	1
ITEM	DRAWING NUMBER	DESCRIPTION	MATERIAL + SPEC	QTY

PARTS LIST

P8510000-01

ARGONNE NATIONAL LABORATORY

ADVANCED PHOTON SOURCE

P8-50 MONO SHUTTER FOR 1-ID BACKSCATTERING CHAMBER WELDMENT ASSEMBLY

DRAWN BY	MUSCIA	5/30/97	
CHECKED BY	J. CHANG	5/20/97	
ENGINEER	CHANG/MUSCIA	5/30/97	
APPROVED BY	J. CHANG	5/20/97	
ENGINEER	D. Shu	6/6/97	
ENGINEER	T.M. Kuzay	6/9/97	
SEE PARTS LIST & NOTE #2			

SCALE: HALF
SHEET 1 of 1
SIZE: E
DRAWING NUMBER: P8-510000-01

1	REDESIGNED	M.J.M.	J.C.	12/4/96

REF. SOURCE

MDC VACUUM PRODUCTS CORP.
23842 VENTURA BLVD.
WATTWOOD, CA. 91365-4697
TEL: 1-800-443-2017
FAX: 1-310-887-0626