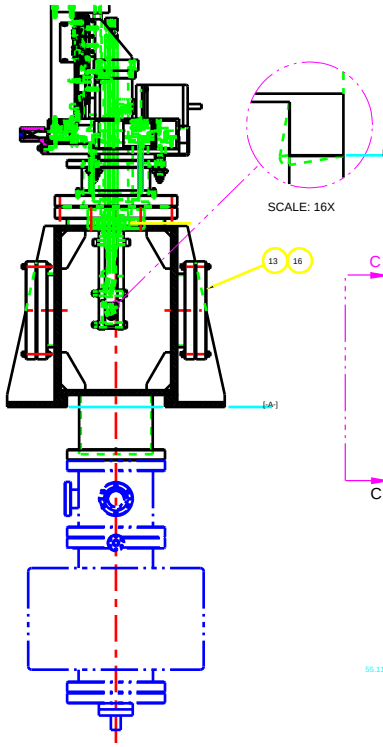

SECTION A-A

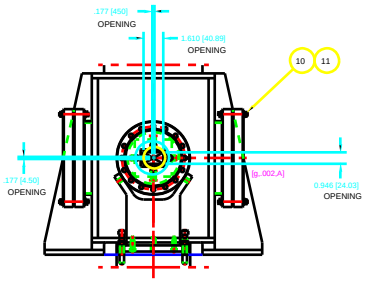

VIEW C-C

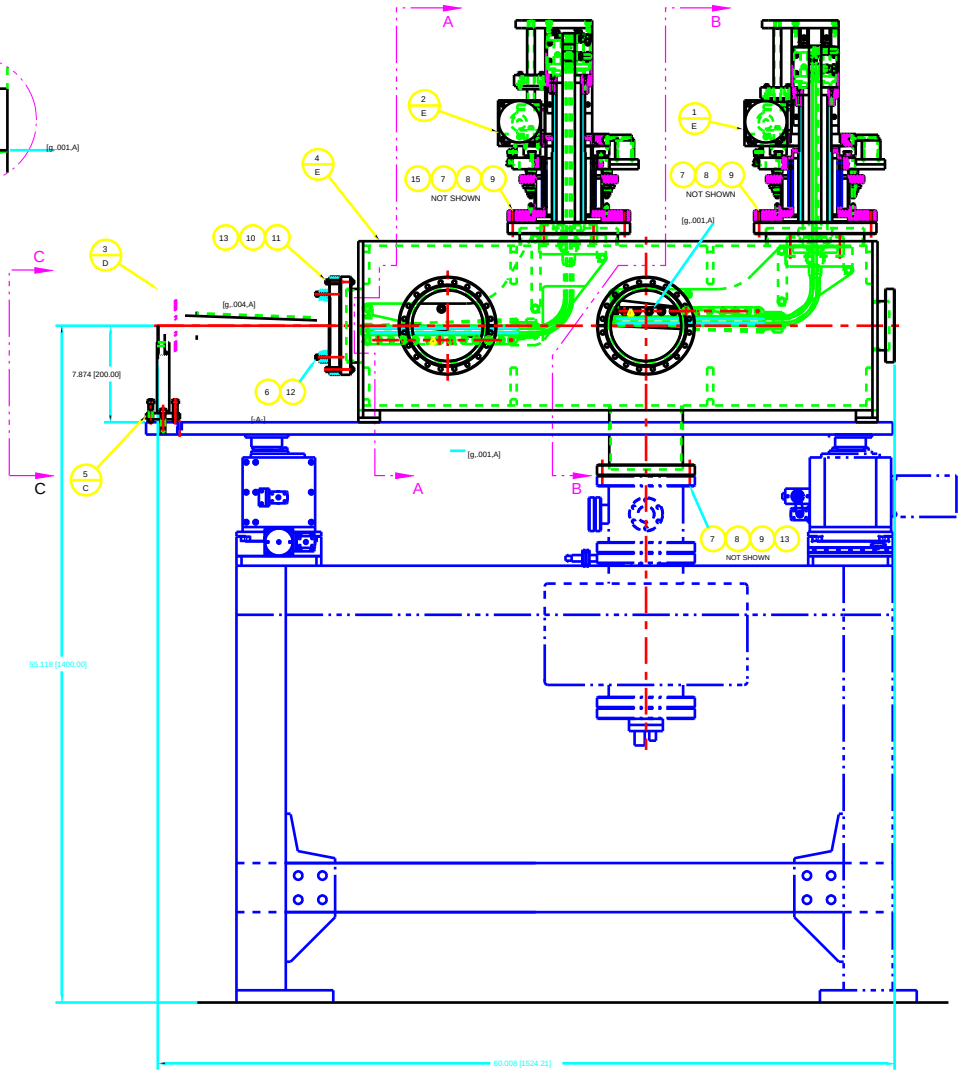

CONFIGURATION "A"

NOTES:

1. THIS IS A ULTRA - HIGH - VACUUM ASSEMBLY (UHV) KEEP THE UHV PARTS CLEAN DURING ASSEMBLY, AND AND WRAP UP FOR PACKING WITH ALUMINUM FOIL

2. THE ASSEMBLY SHALL BE LEAK TESTED USING A MASS SPECTROMETER WITH MINIMUM SENSITIVITY FOR HELIUM OF 2X 10 -10 STANDARD CC/SEC PER LEAK METER DIVISION, SUCH AS:

   ALCATEL ASM-110TCL
   VARIAN NCR 925 OR 936
   VEECO MS-9, MS-90 OR MS-18
   Du PONT CEC 24-120B

   CALIBRATION OF THE LEAK DETECTOR SENSITIVITY SHALL BE PERFORMED JUST PRIOR TO TESTING.

   FINAL TEST WILL CONSIST OF SURROUNDING THE ASSEMBLY (BAGGING) WITH HELIUM. THE ASSEMBLY WILL BE REJECTED IF A 2% DEFLECTION IN THE MOST SENSITIVE RANGE OF THE LEAK DETECTOR IS SENSED WITHIN 1 MIN.

3. THIS SHEET SHOWS CONFIGURATION "A" USING FIXED MASK L5-830000 WITH MDC'S REDUCING FLANGE #150033. SHEET 2 OF 2 SHOWS CONFIGURATION "B" USING FIXED MASK L5-870000 WITH MDC'S REDUCER FLANGE #150033. SHEET 2 OF 2 ALSO SHOWS CONFIGURATION "C" USING FIXED MASK L5-230000

4. ACCORDING TO BEAM LINE LAYOUT DESIGN, THE FIXED MASK L5-830000 OR L5-870000 CAN BE MOUNTED TO OTHER COMPONENTS UP STREAM FROM L5

5. DIMENSIONS IN [ ] ARE MILLIMETERS AND FOR REF. ONLY

Design Specifications
for L5 Undulator White Beam Slits:

1. Location: 27.5 m from APS ID Straight Section Center
2. Optical Aperture Area:

   CONFIGURATION "A" USING FIXED MASK L5-830000
   INput: 40 mm (H) x 24 mm (V)
   Output: 4.5 mm (H) x 4.5 mm (V)

   CONFIGURATION "B" USING FIXED MASK L5-870000
   INput: 10 mm (H) x 10 mm (V)
   Output: 4.5 mm (H) x 4.5 mm (V)

   CONFIGURATION "C" USING FIXED MASK L5-230000
   INput: 4O mm (H) x 21 mm (V)
   Output: 7 mm (H) x 7 mm (V)

3. Actuator Maximum Speed: 10 mm/min
4. Input Flange O.D.: 150 mm
5. Output Flange O.D.: 150 mm
6. Vertical Slit Grazing Incidence Angle: 2.5 degree
7. Horizontal Slit Grazing incidence Angle: 2.5 degree
8. Slits Material: TZM with OFHC Cooling tube
9. Water Cooling: Coaxial Mesh-filled or Micro-channel
10. Actuator Motion Resolution: 0.2 um (A1-85)
11. Device Flange to Flange Length: 1490 mm
12. Vacuum: UHV Compatible
13. Maximum Total Power: APS 2.4m UNDULATOR A,
    5300W (CONFIGURATION A & B)
    3800W (CONFIGURATION C)

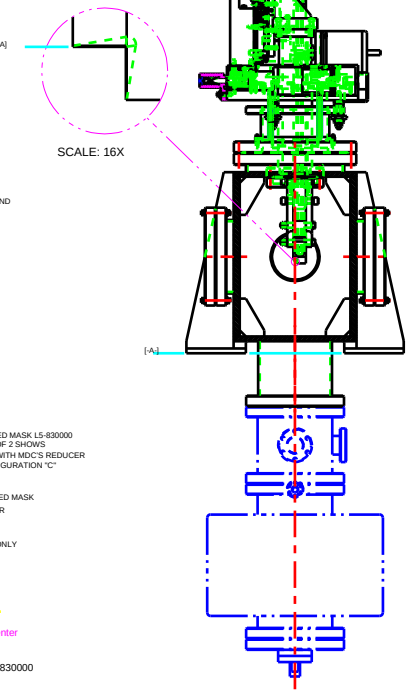

SECTION B-B

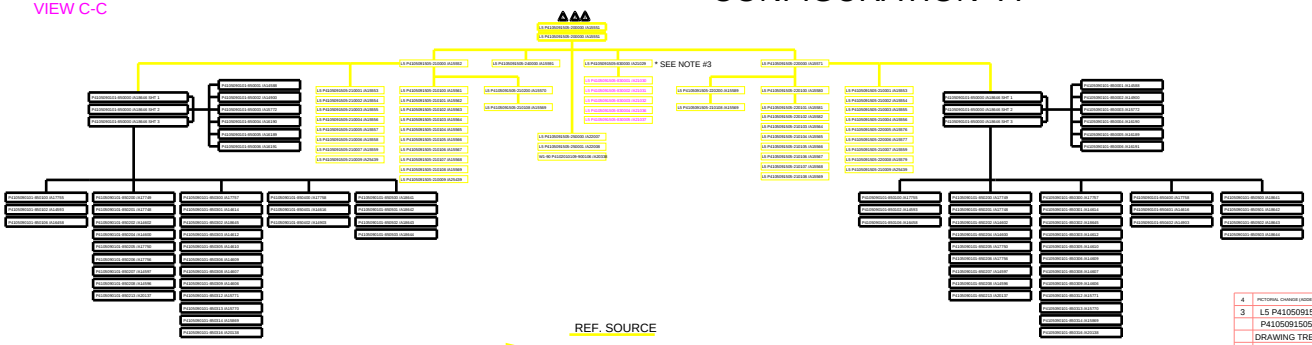

	15	#110030	8" O.D. NONROTATABLE VACUUM FLANGE	SST	4
	14	#191019	10" O.D. VAC. FLG. COPPER GASKET	OFHC COPPER	2
	13	#191017	8" O.D. VAC. FLG. COPPER GASKET	OFHC COPPER	6
	12	#191013	6" O.D. VAC. FLG. COPPER GASKET	OFHC COPPER	1
	11	#190074	8" O.D. VAC. FLG. PLATE NUT 5/16 - 24	SILVER PLATE	100
	10		12 PT. HD. BOLT 5/16-24 UNF 2B X 2 1/8" LG.	SILVER PLATE	100
	9		HEX NUT .312-24 UNF-2B	SST	68
	8		SOCKET HEAD CAP SCREW .312-24 UNF-3A x 2.25 LG.	SST	68
	7		FLATWASHER .34 I.D. x .75 O.D. x .04 THK	SST	68
	6		12 PT. HD. BOLT .312-24 UNF-3A x 1.25 LG.	SILVER PLATE	16
	A22007	5	P4105091505-250000	ADJUSTABLE SUPPORT ASSEMBLY	1
	A15591	4	P4105091505-240000	L5 VACUUM CHAMBER ASSEMBLY	1
* SEE NOTE #3	A21029	3	P4105091505-830000	L5-83 FIXED MASK ASSEMBLY W/ MDC'S ADAPTER #150033	1
	A15571	2	P4105091505-220000	L5 LOWER ASSEMBLY	
	A15552	1	P4105091505-210000	L5 UPPER ASSEMBLY	
	LOG				

REF. SOURCE

MDC VACUUM PRODUCTS CORP.
23842 CABOT BLVD.
HAYWARD CA. 944545-1651
1-800-443-8817
FAX: 1-510-887-0626

4	PICTORIAL CHANGE (ADDED SCREWS FOR UPPER & LOWER TUBE CLAMPING)	RAF	JC	2/20/97
3	L5 P4105091505-250000-00 WAS			
	P4105091505-830100-00			
	DRAWING TREE BROUGHT UP TO DATE	M.J.M		
2	SHEET 2 OF 2 ADDED			
	ITEMS 5, 10, 11, 12, 13, 14, & 15			
	ADDED CONFIGURATIONS B & C ADDED			
	DRAWING TREE BROUGHT UP TO DATE	M.J.M		
1	DRAWING BROUGHT UP TO DATE			
	LEAK TEST NOTE ADDED	M.J.M		
REV	DESCRIPTION OF REVISIONS	BY	CHK'D	DATE

PARTS LIST

A15551A4	ARGONNE NATIONAL LABORATORY		
DRAWN BY MUSCIA 1/94	CHECKED BY D. SHU 3/94		
DESIGNED BY D. SHU 1/94	APPROVED BY T.M. KUZAY 3/94		
ENGINEER MUSCIA 1/94	PROJECT MGR		
D. SHU 3/94			
SEE PARTS LIST	SHEET 1/4	SIZE E	P4105091505-200000-04

ADVANCED PHOTON SOURCE
L5 APS UNDUATOR WHTIE BEAM
H & V SLITS
MAIN ASSEMBLY