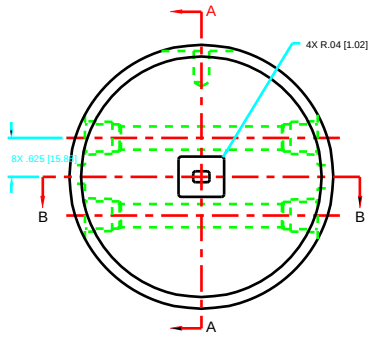


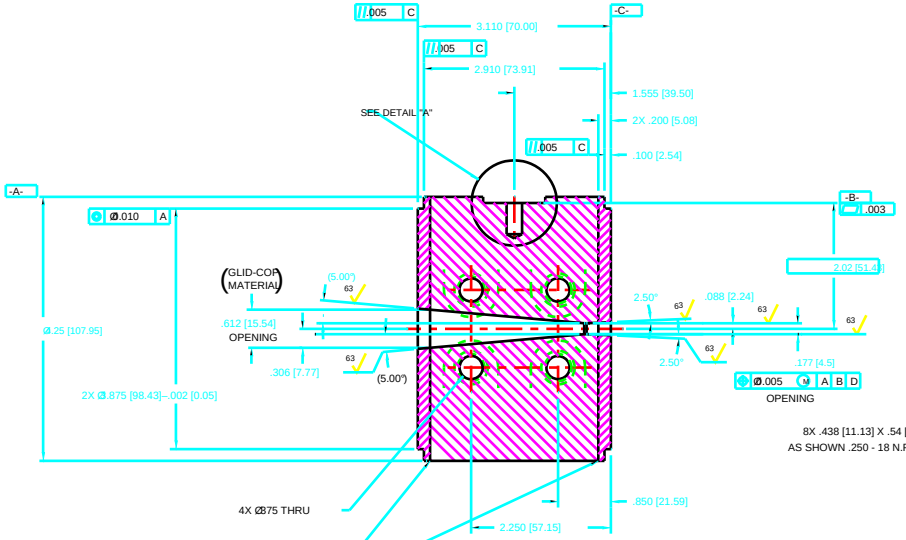


SECTION A - A

ULTRA - HIGH VACUUM
TIGHT EXPLOSIVE BONDING
(FULL LENGTH ULTRASONIC TEST NEEDED)

8X .438 [11.13] X .54 [14.22] DP.
AS SHOWN .250 - 18 N.P.T X .44 [11.18] DP.

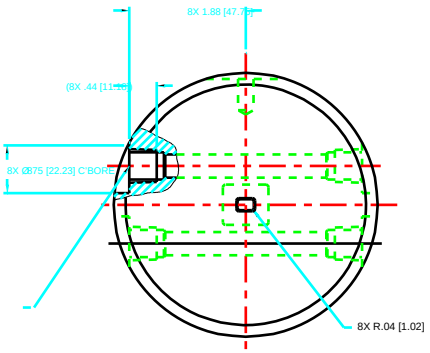


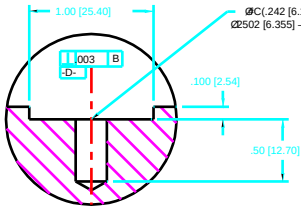


DETAIL "A"
SCALE 2X

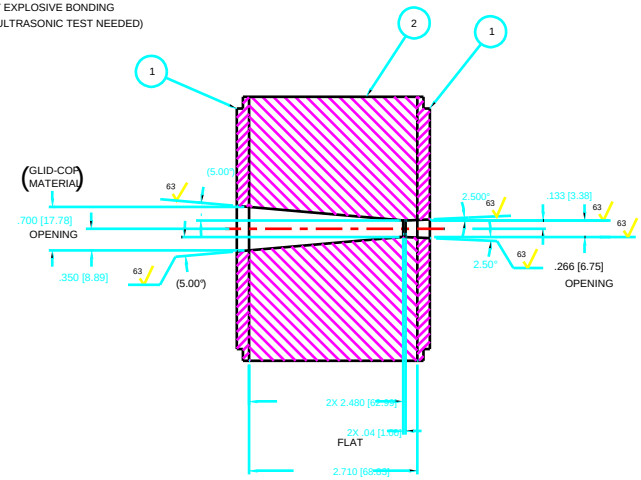


SECTION B - B

NOTES:

1. WHEN MACHINING VACUUM PARTS, USE OF SILICONE AND SULPHUR-BASED CUTTING FLUIDS IS PROHIBITED. USE ONE OF THE FOLLOWING:
   A) CIMCOOL 5 STAR 49
   B) TRIM SOL

2. ULTRASONIC BONDING SHALL BE LEAK TESTED USING A MASS SPECTROMETER WITH MINIMUM SENSITIVITY FOR HELIUM OF 2X 10 -10 STANDARD CC/SEC PER LEAK METER DIVISION, SUCH AS:

   ALCATEL ASM-11OTCL
   VARIAN NCR 925 OR 936
   VEECO MS-9, MS-90 OR MS-18
   Du PONT CEC 24-120B

   CALIBRATION OF THE LEAK DETECTOR SENSITIVITY SHALL BE PERFORMED JUST PRIOR TO TESTING.

   FINAL TEST WILL CONSIST OF SURROUNDING THE ASSEMBLY (BAGGING) WITH HELIUM. THE ASSEMBLY WILL BE REJECTED IF A 2% DEFLECTION IN THE MOST SENSITIVE RANGE OF THE LEAK DETECTOR IS SENSED WITHIN 1 MIN.

3. CERTIFICATION OF ULTRA SONIC TEST AND VACUUM EXAMINATION SHALL BE SIGNED BY A CONTRACTOR REPRESENTATIVE AUTHORIZED TO SIGN SUCH CERTIFICATION

4. KEEP THE ASSEMBLY CLEAN, AND WRAP FOR UHV PACKING WITH ALUMINUM FOIL.

5. DIMENSIONS IN [ ] ARE MILLIMETERS AND FOR REF. ONLY

| ITEM | DWG/PART NUMBER | NOMENCLATURE OR DESCRIPTION | MATERIAL / SPEC | QTY |
|---|---|---|---|---|
| 2 | | BODY | GLID-COP | 1 |
| 1 | | PLATE | 304 STAINLESS STEEL | 2 |

PARTS LIST

| SYM | CHANGE DESCRIPTION | BY | CHKD | DATE |
|---|---|---|---|---|
| | | | | |
| | | | | |
| | | | | |

REVISIONS

UNLESS OTHERWISE SPECIFIED: ALL DIMENSIONS ARE IN INCHES
TOLERANCES
DECIMALS: .X ± .1 [2.5]; .XX ± .01 [0.25]; .XXX ± .005 [0.13]
ANGULAR: ± 0°30'
SURFACE ROUGHNESS 125
REMOVE ALL BURRS AND BREAK SHARP EDGES .03 MAX.
SURFACE TEXTURE TO BE IN ACCORDANCE WITH LATEST ANSI B46.1
DIMENSIONING & TOLERANCING IN ACCORDANCE WITH LATEST ANSI Y14.5
DO NOT SCALE DRAWING

LOG NUMBER: L5880001-00

THIS DRAWING IS THE PROPERTY OF: ARGONNE NATIONAL LABORATORY

| | | | |
|---|---|---|---|
| DRAWN BY: MUSCIA | DATE: 1/28/98 | CHIEF DESIGN ENGINEER: D. Shu | DATE: 2/10/98 |
| CHECKED BY: J. CHANG | 2/10/98 | GP LEADER: T.M. Kuzay | 2/18/98 |
| DESIGNER: CHANG/MUSCIA | 1/28/98 | PROJECT MGR. | |
| RESPONSIBLE ENGINEER: J. CHANG | 2/10/98 | APPROVED/RELEASED | |

TITLE: ADVANCED PHOTON SOURCE
L5-88 APS ULNDULATOR
WHITE BEAM H & V SLITS
FIXED MASK
MAIN BODY

MATERIAL: SEE PARTS LIST

SCALE: 1:1 | SIZE: D | DRAWING NUMBER: L5-880001-00

SHEET 1 of 1