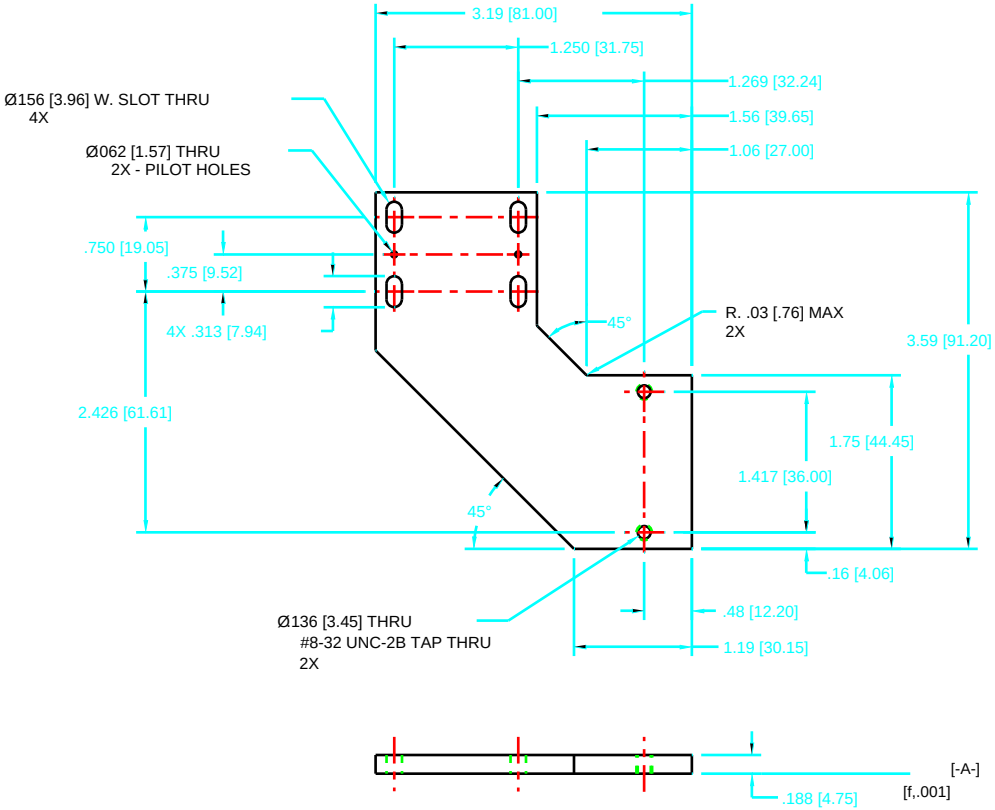

NOTES:

1. DIMENSIONS IN [ ] ARE MILLIMETERS AND ARE FOR REFERENCE ONLY.

SYM	CHANGE DESCRIPTION	BY	CHKD	DATE

REVISIONS

ITEM	DWG/PART NUMBER	NOMENCLATURE OR DESCRIPTION	MATERIAL / SPEC	QTY

PARTS LIST

UNLESS OTHERWISE SPECIFIED:
ALL DIMENSIONS ARE IN INCHES

TOLERANCES

DECIMALS		ANGULAR
.X –	.015 [.381]	– .25
.XX –	.010 [.254]	
.XXX –	.005 [.127]	

SURFACE ROUGHNESS 125

REMOVE ALL BURRS AND BREAK SHARP EDGES .03 MAX.

SURFACE TEXTURE TO BE IN ACCORDANCE WITH LATEST ANSI B46.1

DIMENSIONING & TOLERANCING IN ACCORDANCE WITH LATEST ANSI Y14.5

DO NOT SCALE DRAWING

LOG NUMBER
A2232900

THIS DRAWING IS THE PROPERTY OF
ARGONNE NATIONAL LABORATORY

DRAWN BY R. KRAKORA	DATE 2/95	CHIEF DESIGN ENGINEER	DATE	TITLE ADVANCED PHOTON SOURCE
CHECKED BY C. BRITE	DATE 2/95	GP LEADER	DATE	L7 SOFT X-RAY VERTICAL EXIT SLIT
DESIGNER R. KRAKORA	DATE 2/95	PROJECT MGR	DATE	ENCODER BRACKET (OUTER)
RESPONSIBLE ENGINEER C. BRITE	DATE 2/95	APPROVED/RELEASED	DATE	

MATERIAL
SST 304L

SCALE 1:1
SHEET 1 of 1
SIZE C
DRAWING NUMBER P4105091507-210007-00