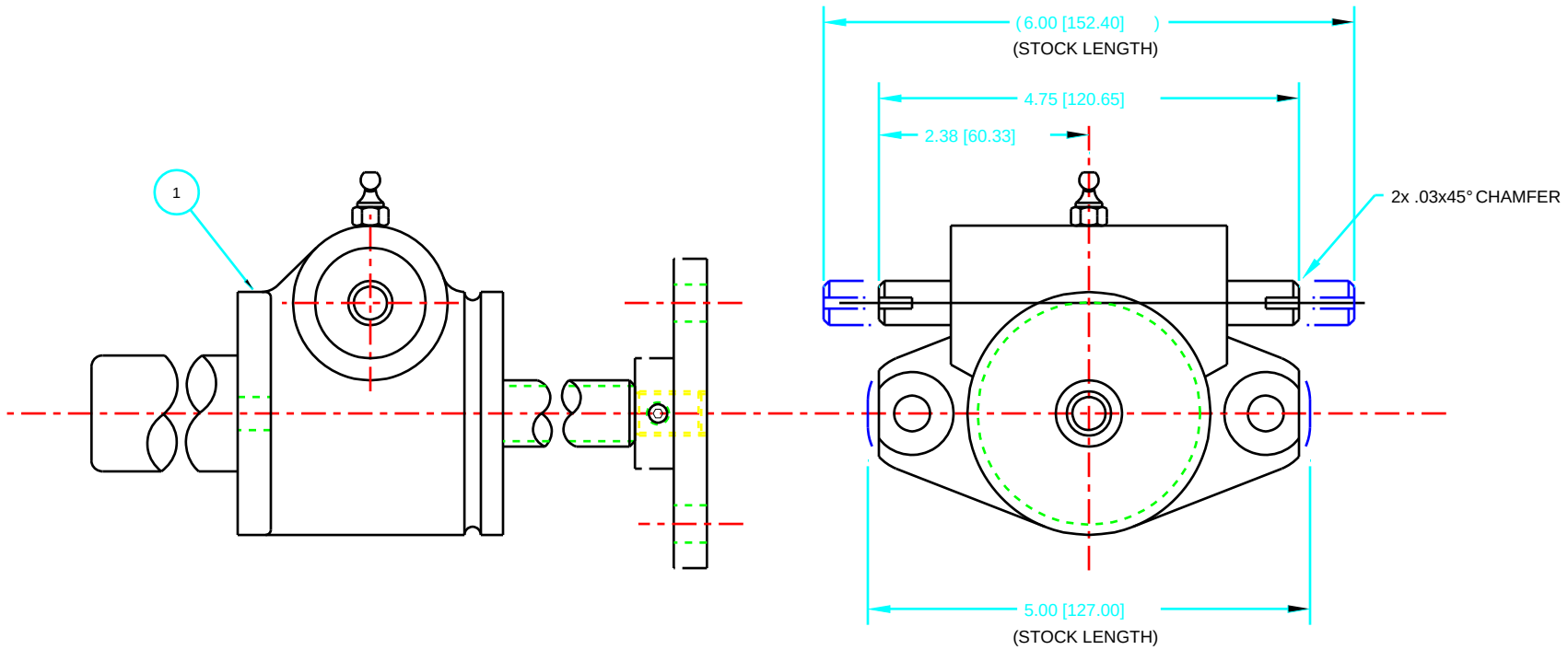

NOTE

DIMENSIONS IN BRACKETS [ ] ARE FOR REFERENCE ONLY.

ITEM	DWG/PART NUMBER	NOMENCLATURE OR DESCRIPTION	MATERIAL / SPEC	QTY
1	1-MSJ-U-13.25"TRAVEL 20:1 GEAR RATIO WITH TOP PLATE	"ACTIONJAC" MACHINE SCREW JACK W/OPTIONAL TOP PLATE & 13.25" TRAVEL	-	1

PARTS LIST

SOURCE:

1 "ACTIONJAC"
NOOK INDUSTRIES INC.
23200 COMMERCE PARK RD.
CLEVLAND OHIO, 44122-5869
(216) 464-4393

USED ON #P4105090504-230000

SYM	CHANGE DESCRIPTION	BY	CHKD	DATE

REVISIONS

UNLESS OTHERWISE SPECIFIED:
ALL DIMENSIONS ARE IN INCHES

TOLERANCES

DECIMALS		ANGULAR
.X –	.1 [2.5]	– 0°30'
.XX –	.01 [0.25]	
.XXX –	.005 [0.127]	

SURFACE ROUGHNESS ✓

REMOVE ALL BURRS AND BREAK SHARP EDGES .03 MAX.

SURFACE TEXTURE TO BE IN ACCORDANCE WITH LATEST ANSI B46.1

DIMENSIONING & TOLERANCING IN ACCORDANCE WITH LATEST ANSI Y14.5

DO NOT SCALE DRAWING

LOG NUMBER A18027

THIS DRAWING IS THE PROPERTY OF ARGONNE NATIONAL LABORATORY

DRAWN BY K.POTTER	DATE	CHIEF DESIGN ENGINEER	DATE
CHECKED BY		GP LEADER	
DESIGNER		PROJECT MGR.	
RESPONSIBLE ENGINEER		APPROVED/RELEASED	

TITLE
ADVANCED PHOTON SOURCE
T4 TELESCOPING LEG
334 MM TRAVEL
MACHINE SCREW JACK

MATERIAL SEE PARTS LIST

SCALE 1:1 | SHEET 1 of 1 | SIZE C | DRAWING NUMBER P4105090504-230001-00