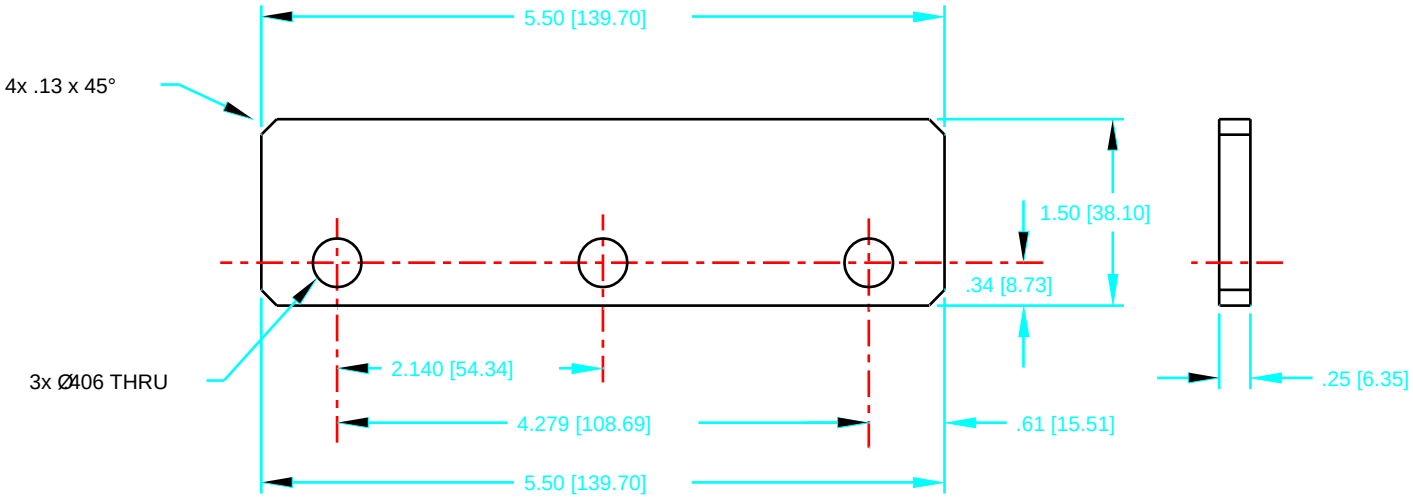

FINISH:
COMMERCIAL GRADE CLEAR ZINK PLATE

DIMENSIONS IN BRACKETS [ ] ARE FOR REF. ONLY

USED ON #P4105090506-240000

SYM	CHANGE DESCRIPTION	BY	CHKD	DATE

REVISIONS

ITEM	DWG/PART NUMBER	NOMENCLATURE OR DESCRIPTION	MATERIAL / SPEC	QTY

PARTS LIST

UNLESS OTHERWISE SPECIFIED:
ALL DIMENSIONS ARE IN INCHES

TOLERANCES

DECIMALS		ANGULAR
.X –	.1	– 0°30'
.XX –	.03	
.XXX –	.010	

SURFACE ROUGHNESS 125

REMOVE ALL BURRS AND BREAK SHARP EDGES .03 MAX.

SURFACE TEXTURE TO BE IN ACCORDANCE WITH LATEST ANSI B46.1

DIMENSIONING & TOLERANCING IN ACCORDANCE WITH LATEST ANSI Y14.5

DO NOT SCALE DRAWING

LOG NUMBER
A2155100

THIS DRAWING IS THE PROPERTY OF
ARGONNE NATIONAL LABORATORY

DRAWN BY K.POTTER	DATE 1/4/94	CHIEF DESIGN ENGINEER	DATE	TITLE
CHECKED BY		GP LEADER		
DESIGNER POTTER/BARRAZA	DATE 1/4/94	PROJECT MGR.		
RESPONSIBLE ENGINEER		APPROVED/RELEASED		

TITLE
ADVANCED PHOTON SOURCE
T6 SPECTROMETER TABLE
POSITIVE STOP PLATE

MATERIAL
MILD STEEL

SCALE 1:1
SHEET 1 of 1

SIZE B

DRAWING NUMBER
P4105090506-240014-00