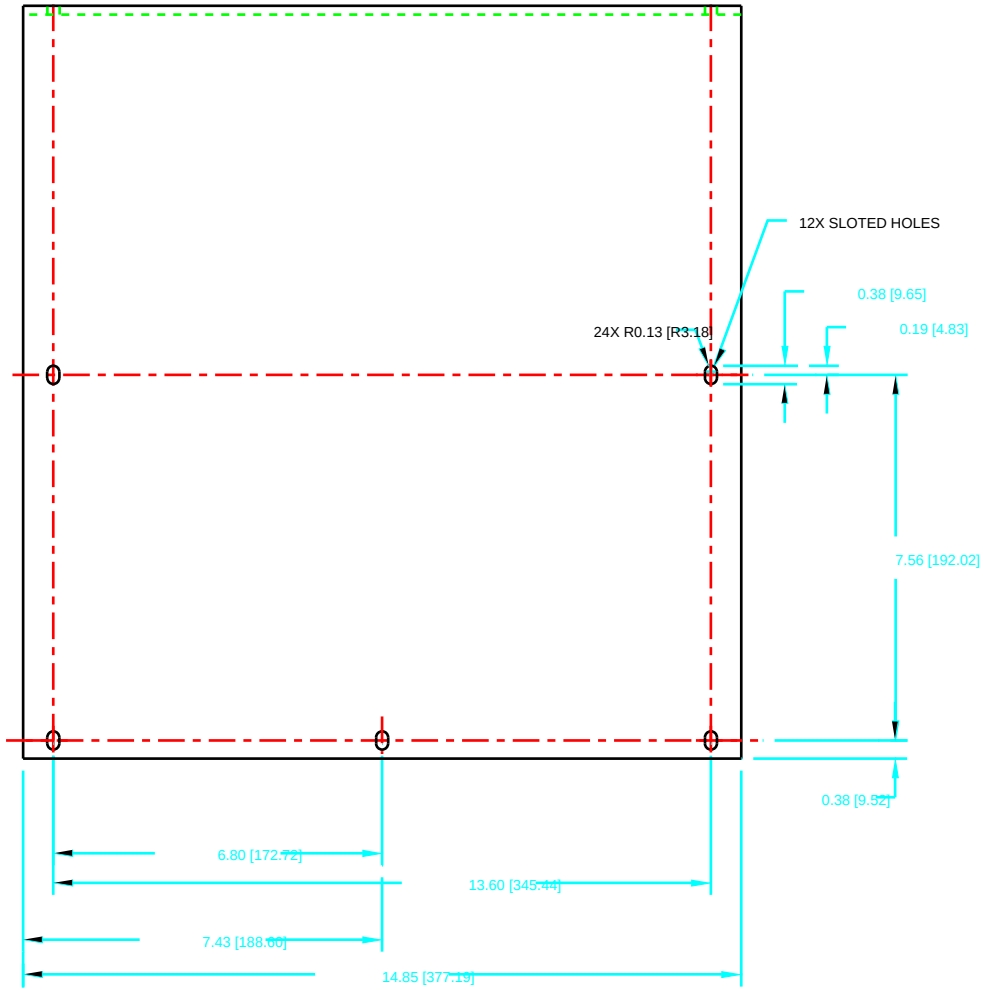

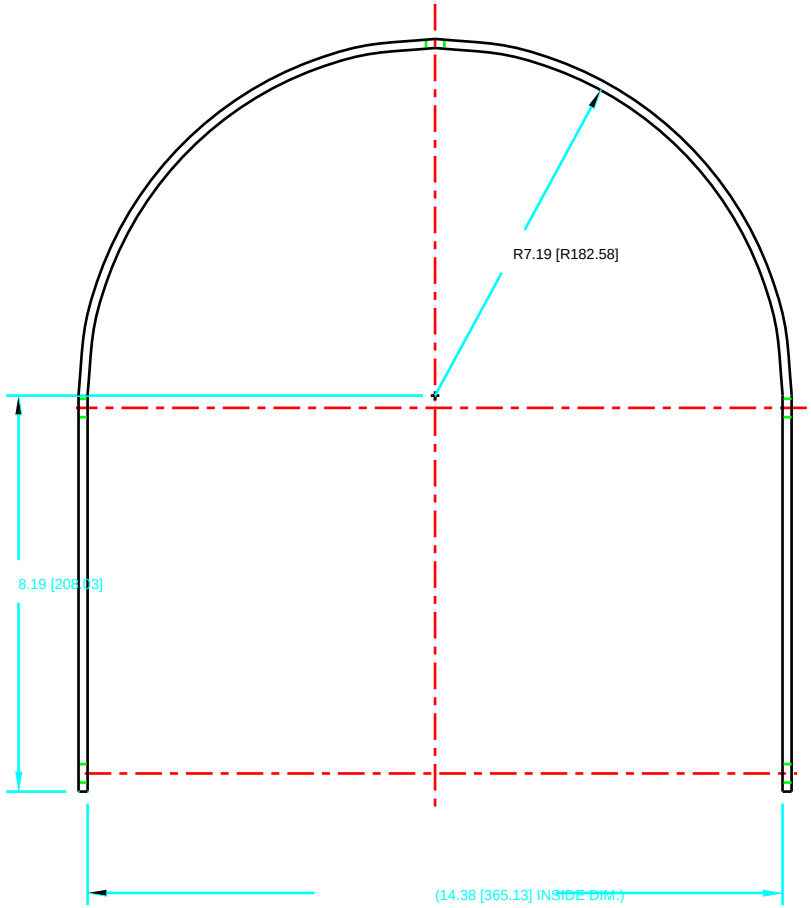

NOTE:

DIMENSIONS IN [ ] ARE MILLIMETERS
AND ARE FOR REFERENCE ONLY.

ITEM	DWG/PART NUMBER	NOMENCLATURE OR DESCRIPTION	MATERIAL / SPEC	QTY

PARTS LIST

UNLESS OTHERWISE SPECIFIED ALL DIMENSIONS ARE IN INCHES
TOLERANCES
DECIMALS: X ± .03 [.7620]; XX ± .01 [0.25]; XXX ± .005 [0.127]
ANGULAR: ± .25°
SURFACE ROUGHNESS 125
REMOVE ALL BURRS AND BREAK SHARP EDGES .03 MAX.
SURFACE TEXTURE TO BE IN ACCORDANCE WITH LATEST ANSI B46.1
DIMENSIONING & TOLERANCING IN ACCORDANCE WITH LATEST ANSI Y14.5
DO NOT SCALE DRAWING

DRAWING NUMBER: U1630005-00

THIS DRAWING IS THE PROPERTY OF ARGONNE NATIONAL LABORATORY

DRAWN BY: D.FALLIN	DATE: 10/05/99	CHIEF DESIGN ENGINEER: D. SHU	DATE: 12/19/99
CHECKED BY: J. CHANG	DATE: 12/7/99	GP LEADER: T. KUZAY	DATE: 1/6/00
DESIGNER: D. FALLIN	DATE:	PROJECT MGR.	DATE:
RESPONSIBLE ENGINEER: J. CHANG	DATE: 12/7/99	APPROVED/RELEASED	DATE:

TITLE: ADVANCED PHOTON SOURCE
U1-60
WHITE BEAM SHIELDED
TRANSPORT SUPPORT 4-ID-B-D
COVER (LEXAN)
DETAIL (Ø.5 BELLOWS)

MATERIAL: 3/16" THK LEXAN
SCALE: 1:2
SHEET 1 of 1
SIZE: C
DRAWING NUMBER: U1-630005-00

SYM	CHANGE DESCRIPTION	BY	CHKD	DATE

REVISIONS