(C)	PLOT SCALE: .5=1	DWG. SCALE: 2	A14771

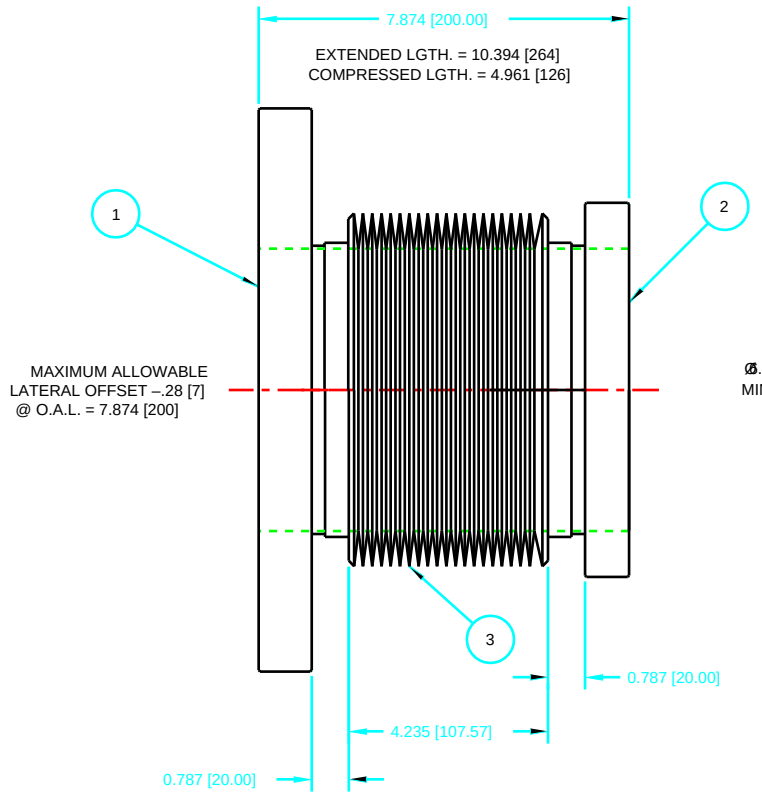

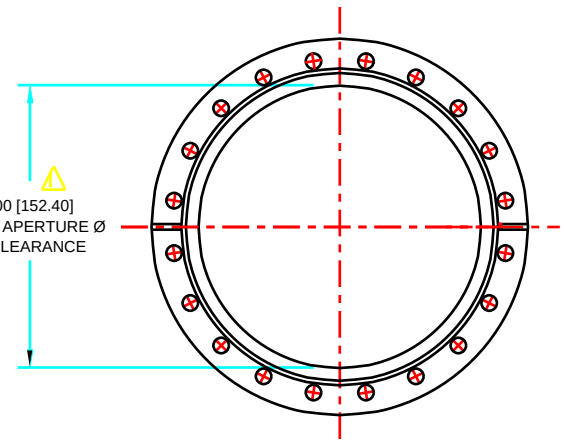

NOTES:

1. WHEN MACHINING VACUUM PARTS, USE OF SILICONE AND SULPHUR-BASED CUTTING FLUIDS IS PROHIBITED. USE ONE OF THE FOLLOWING:
   A) CIMCOOL 5 STAR 49
   B) TRIM SOL

2. ALL WELDS JOINING BELLOWS AND FLANGES ARE TO BE INTERNAL

3. BELLOWS ASSEMBLY SHALL BE LEAK TESTED USING A MASS SPECTROMETER WITH MINIMUM SENSITIVITY FOR HELIUM OF 2 X 10 -10 STANDARD CC/SEC PER LEAK METER DIVISION, SUCH AS
   ALCATEL SAM-110TCL
   Du PONT CEC 24-120B
   VARIAN MS-9, MS-90 OR MS-18

   CALIBRATION OF THE LEAK DETECTOR SENSITIVITY SHALL BE PERFORMED JUST PRIOR TO TRESTING.

   FINAL TEST WILL CONSIST OF SURROUNDING THE ASSEMBLY (BAGGING) WITH HELIUM. THE ASSEMBLY WILL BE REJECTED IF A 2% DEFLECTION ON THE MOST SENSITIVE RANGE OF THE LEAK DETECTOR IS SENSED WITHIN 1 MIN.

4. KEEP THE PART CLEAN, AND WRAP FOR UHV PACKING WITH ALUMINUM FOIL.

5. DIMENSIONS IN [ ] ARE MILLIMETERS

REF. SOURCES

3 STANDARD BELLOWS CO.
375 TUNPIKE AVE.
WINDSOR LOCKS, CONN. 06096

2 MDC VACUUM PRODUCTS CORP.
23842 CABOT BLVD.
HAYWARD, CA. 94545-1651

1 NOR-CAL PRODUCTS, INC.
1967 S. OREGON ST.
YREKA, CA. 96097

ITEM	DWG/PART NUMBER	NOMENCLATURE OR DESCRIPTION	MATERIAL / SPEC	QTY
3		ST'D. BELLOWS CAT. #750 - 600 - 5 - EE	WITH EXTENDED ENDS	1
2	MDC'S CAT. #100031	8" CF. ROTATABLE FLANGE		1
1	N.C. #1200-00N	12" CF. NONROTATABLE FLANGE		1

PARTS LIST

SYM	CHANGE DESCRIPTION	BY	CHKD	DATE
1	V2920000-01 WAS A14771			
	V2-920000-01 WAS			
	410509702-920000-00			
	(NEW LOG # & PART #)			
	Ø6.000 [152.40] WAS Ø6.000 [101.60]	M.J.M.		

REVISIONS

UNLESS OTHERWISE SPECIFIED ALL DIMENSIONS ARE IN INCHES
TOLERANCES
DECIMALS: .X ± .03 [.7620]; .XX ± .01 [0.25]; .XXX ± .005 [0.127]
ANGULAR: ± .25°
SURFACE ROUGHNESS 125
REMOVE ALL BURRS AND BREAK SHARP EDGES .03 MAX.
SURFACE TEXTURE TO BE IN ACCORDANCE WITH LATEST ANSI B46
MACHINING & TOLERANCING IN ACCORDANCE WITH LATEST ANSI Y14
DO NOT SCALE DRAWING

LOG NUMBER: V2920000-01

THIS DRAWING IS THE PROPERTY OF ARGONNE NATIONAL LABORATORY

DRAWN BY: MUSCIA	DATE: 2/18/93	CHIEF DESIGN ENGINEER: D. SHU	DATE: 7/6/99
CHECKED BY: D. SHU	7/6/99	OP LEADER: T.M. KUZAY	7/6/99
DESIGNER: SHU/MUSCIA	2/18/93	PROJECT MGR.	
RESPONSIBLE ENGINEER: D. SHU	7/6/99	APPROVED/RELEASED	

TITLE: ADVANCED PHOTON SOURCE
V2-92 WELDED BELLOWS ASSY.
12"-8" CF. 6" I.D. X 200mm

MATERIAL: SEE PARTS LIST
SCALE: HALF
SHEET 1 of 1
SIZE: C
DRAWING NUMBER: V2-920000-01