(E	PLOT SCALE: 1=1	DWG. SCALE: 1	A11615

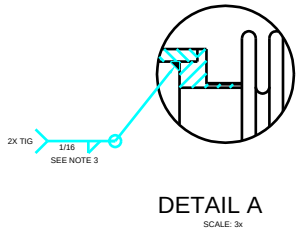

DETAIL A
SCALE: 3x

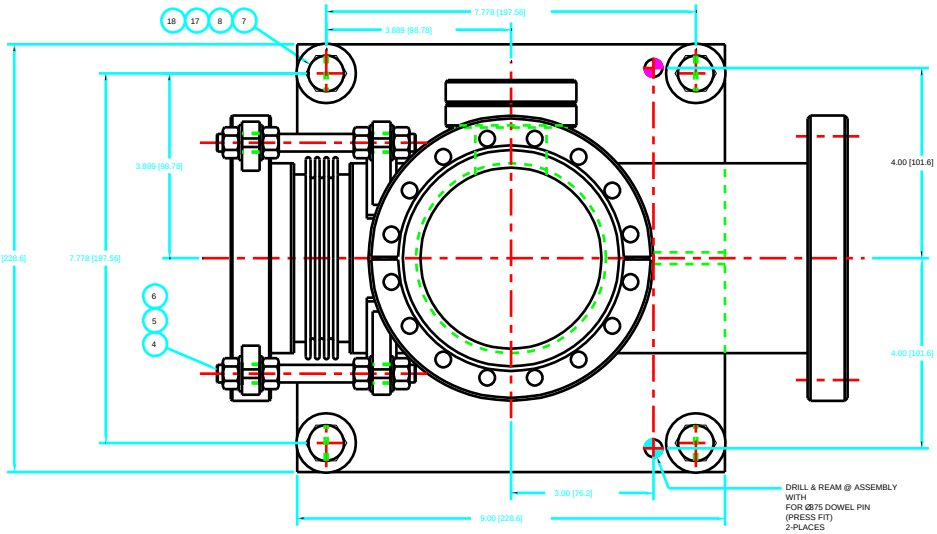

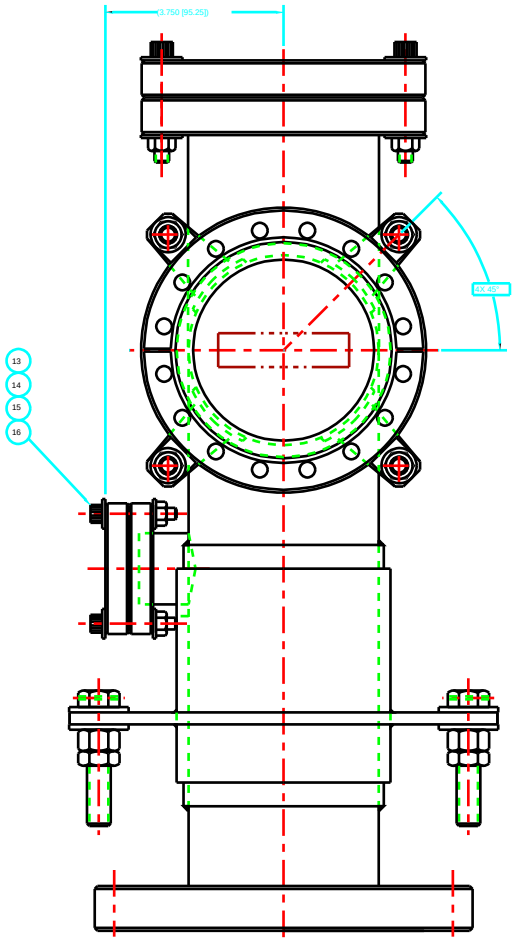

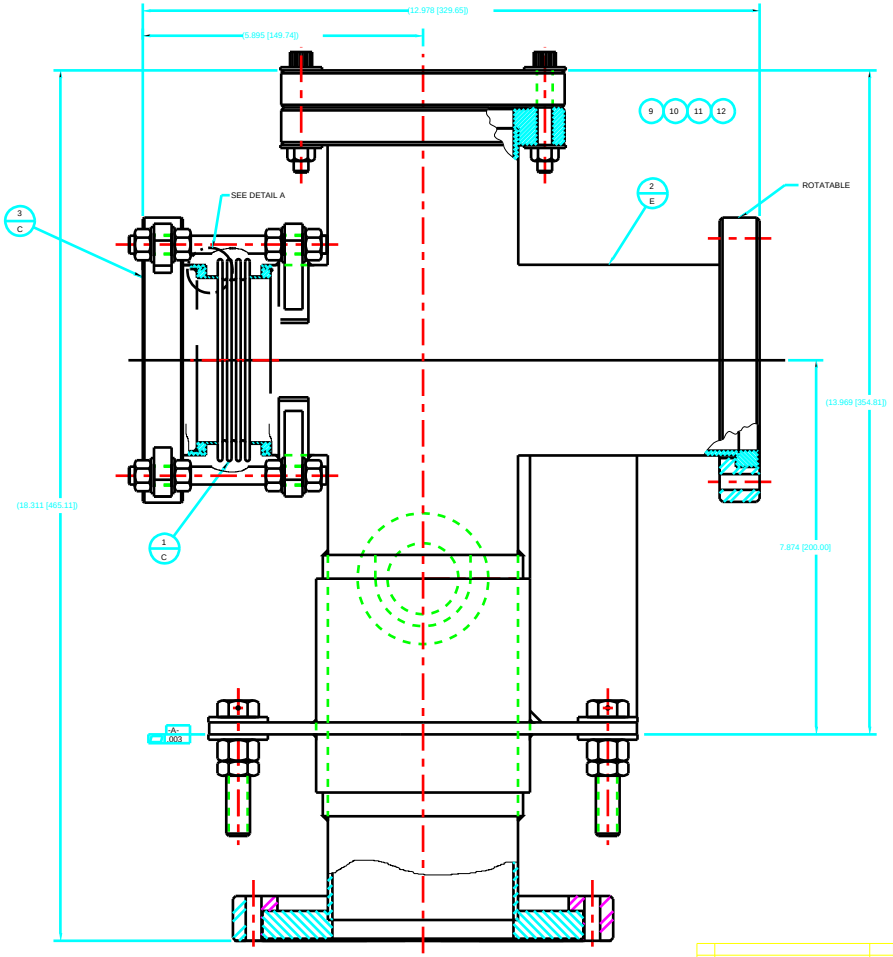

NOTES:

1. WHEN MACHINING VACUUM PARTS, USE OF SILICONE AND SULPHUR-BASED CUTTING FLUIDS IS PROHIBITED, USE ONE OF THE FOLLOWING:
   A) CIMCOLL 5 STAR 49
   B) TRIM SOL
2. THIS IS A UHV ASSEMBLY, ELECTROPOLISHING IS NEEDED BEFORE WELDING. PRIOR TO ELECTROPOLISHING, THE PART NEEDS TO GO THROUGH A MULTIPLE STEP CLEANING PROCESS INVOLVING DEGREASING, WASHING AND DRY NITROGEN BLOW DOWN.
3. WELD ITEM #1 TO ITEM #3 BEFORE WELDING TO ITEM #2.
4. ASSEMBLY SHALL BE LEAK TESTED USING A MASS SPECTROMETER WITH MINIMUM SENSITIVITY FOR HELIUM OF 2 X 10 -10 STANDARD CC/SEC PER LEAK METER DIVISION, SUCH AS

   ALCATEL SAM-110TCL
   Du PONT CEC 24-120B
   VARIAN MS-9, MS-90 OR MS-18

   CALIBRATION OF THE LEAK DETECTOR SENSITIVITY SHALL BE PERFORMED JUST PRIOR TO TRESTING.

   FINAL TEST WILL CONSIST OF SURROUNDING THE ASSEMBLY (BAGGING) WITH HELIUM. THE ASSEMBLY WILL BE REJECTED IF A 2% DEFLECTION ON THE MOST SENSITIVE RANGE OF THE LEAK DETECTOR IS SENSED WITHIN 1 MIN.
5. KEEP THE PART CLEAN, AND WRAP FOR UHV PACKING WITH ALUMINUM FOIL.
6. DIMENSIONS IN [ ] ARE MILLIMETERS

REFERENCE SOURCE

1 DUNIWAY STOCKROOM CORP.
1600 N. SHORELINE BLVD.
MOUNTAIN VIEW CA. 94043
1-800-446-8811

ITEM	DWG/PART NUMBER	NOMENCLATURE OR DESCRIPTION	MATERIAL / SPEC	QTY
18		1/2-13 UNC 2B JAM NUT	STAINLESS STEEL	4
17		1/2-13 UNC HEX. NUT	STAINLESS STEEL	4
16		1/4" PLAIN WASHER (REG.)	STAINLESS STEEL	6
15	SFBN-28-125	1/4-28 x 1 1/4 LG. 12-PT BOLT W/FNUT	STAINLESS STEEL	1
14		METAL GASKET MDC'S CAT. #191004	OFHC COPPER	1
13		2 3/4 O.D. VACUUM FLANGE MDC'S CAT. #110008	STAINLESS STEEL	1
12		5/16" PLAIN WASHER (REG.)	STAINLESS STEEL	16
11	SFBN-24-200	5/16-24 x 2" LG. 12-PT BOLT W/NUT	STAINLESS STEEL	1
10		METAL GASKET MDC'S CAT. #191013	OFHC COPPER	1
9		6" O.D. VACUUM FLANGE MDC'S CAT. #110025	STAINLESS STEEL	1
8		1/2" PLAIN WASHER (REG.)	STAINLESS STEEL	8
7		1/2-13 UNC2-1/2 LG. HHCS (DR. HDS)	STAINLESS STEEL	4
6		3/8" PLAIN WASHER (NARROW)	STAINLESS STEEL	16
5		3/8-16 UNC 2B NUT	STAINLESS STEEL	16
4		3/8-16 UNC 2A x 4-1/4 LG. TIE ROD	STAINLESS STEEL	4
3	P4105090703-830200	FLANGE WELDMENT SUB-ASSEMBLY		1
2	P4105090703-830100	VACUUM CHAMBER WELDMENT SUB-ASSEMBLY		1
1	P4105090703-830001	BELLOWS WELDMENT		1

PARTS LIST

UNLESS OTHERWISE SPECIFIED: ALL DIMENSIONS ARE IN INCHES
TOLERANCES
DECIMALS: X = .01 [.TS25] XX = .25 [6.35] XXX = .005 [0.127]
ANGULAR: ±1°
SURFACE ROUGHNESS: 125
REMOVE ALL BURRS AND BREAK SHARP EDGES .03 MAX.
SURFACE TEXTURE TO BE IN ACCORDANCE WITH LATEST ANSI B46.1
DIMENSIONING & TOLERANCING IN ACCORDANCE WITH LATEST ANSI Y14.5

LOG NUMBER: A11615

THIS DRAWING IS THE PROPERTY OF
ARGONNE NATIONAL LABORATORY

DRAWN BY: MUSCIA	DATE: 6/9/93	CHIEF DESIGN ENGINEER: D.SHU	DATE: 8/31/93
CHECKED BY: J.CHANG	8/31/93	TP LEADER: T.M.KUZAY	8/31/93
DESIGNER: MUSCIA	8/31/93	PROJECT MGR.	
RESPONSIBLE ENGINEER: J.CHANG	8/31/93	APPROVED/RELEASED	

TITLE: ADVANCED PHOTON SOURCE
V3 APS I.D. FRONT END
SLOW VALVE & FAST VALVE
VACUUM CHAMBER
WELDMENT ASSEMBLY

MATERIAL: SEE PARTS LIST

SCALE: 1:1 SHEET 1 of 1 SIZE: E DRAWING NUMBER: P4105090703-830000-00

SYM	CHANGE DESCRIPTION	BY	CHKD	DATE

REVISIONS

DO NOT SCALE DRAWING